Kershaw County, South Carolina Unified Code of ZONING AND LAND DEVELOPMENT REGULATIONS

Approved by the Kershaw County Council
February 23, 2010

As Amended October 25, 2016

TABLE OF CONTENTS

ARTICLE 1	**ORDINANCE**	1-1
1:1	**PREAMBLE**	1-1
1:1.1	**Title**	1-1
1:1.2	**Authority**	1-1
1:1.3	**Purpose**	1-1
1:1.4	**Official Zoning Map**	1-2
1:1.5	**Board of Zoning Appeals**	1-2
1:1.6	**Supersedence and Repeal of Prior Ordinances**	1-2
1:1.7	**Interpretation and Conflict**	1-2
1:1.8	**Separability and Validity**	1-2
1:1.9	**Effective Date**	1-3
1:2	**FINDINGS**	1-3

TABLE OF CONTENTS

ARTICLE 2	**DEFINITIONS**	2-1thru 2-27

TABLE OF CONTENTS

ARTICLE 3	**ZONING REGULATIONS**	3-1
3:1	**PRIMARY ZONING DISTRICTS**	3-1
3:1.1	**Establishment of Zoning Districts, Purpose of Districts, and Rules for Interpretation of District Boundaries**	3-1
3:1.1-1	Establishment of Districts	3-1
Table 3-1	Table 3-1,Primary Zoning Districts	3-1
Table 3-2	Table 3-2,Special Purpose Districts	3-1
3:1.1-2	Purpose of Districts	3-1
3:1.1-3	Primary Districts	3-1
3:1.1-3A	Residential Districts	3-1
3:1.1-3B	Institutional and Commercial Districts	3-2
3:1.1-3C	Rural Resource Districts	3-3
3:1.1-3D	Special Purpose Districts	3-3
3:1.1-4	Establishment of Official Zoning Map(s)	3-4
3:1.1-5	Amendments to the Official Zoning Map(s)	3-4
3:1.1-6	Rules for Interpretation of District Boundaries on Official Zoning Map(s)	3-5
3:1.2	**Establishment of Tables**	3-5
3:1.3	**Use of Tables**	3-5
Table 3-3	Table 3-3, Schedule of Permitted and Conditional Uses and Off-Street Parking Requirements by Zoning District	3-7
Table 3-4	Table 3-4, Schedule of Lot Area, Yard, Setback, Height, Density, Floor Area, and Impervious Surface Requirements by District for Residential Uses	3-19
Table 3-5	Table 3-5, Schedule of Lot Area, Yard Setback, Height, Density, Floor Area, & Impervious Surface Requirements by District for Residential Uses - Conservation Design	3-20
Table 3-6	Table 3-6, Schedule of Lot Area, Yard Setback, Height, Density, Floor Area and Impervious Surface Requirements by District for Non-Residential Uses	3-21
3:2	**GENERAL ZONING PROVISIONS**	3-22
3:2.1	**Yards and Setbacks**	3-22
3:2.1-1	Determination of Front, Side, and Rear Yards and Setbacks	3-22
3:2.1-2	Setback Areas (Yards)	3-22
3:2.1-3	Yard and Setback Modifications	3-22
3:2.1-4	Example of Setbacks, Yards, and Buildable Area	3-23
3:2.1-5	Buildable Area	3-24
3:2.2	**Use of Land and Structures**	3-24
3:2.2-1	Conformity with Zoning District Regulations	3-24
3:2.2-2	Number of Permitted Dwellings per Lot	3-24
3:2.3	**Nonconformities**	3-25
3:2.3-1	Existing Nonconforming Lots of Record	3-25
3:2.3-2	Existing Nonconforming Uses, Buildings, and Structures	3-25
3:2.4	**Temporary Uses**	3-26
3:2.5	**Regulations for Accessory Structures and Uses**	3-28
3:2.5-1	Accessory Uses to Observe Required Setbacks	3-28
3:2.5-2	General Requirements	3-28
3:2.5-3	Location of Accessory Structures	3-29
3:2.5-4	Accessory Structures without Principle Building	3-30
3:2.6	**Exceptions to Height Limitations**	3-30

3:2.7	**Prohibited Lighting**	3-31
3:3	**CONDITIONAL USES**	3-31
3:3.1	**Accessory Apartments**	3-31
3:3.2	**Home Occupations**	3-31
3:3.3	**Bed and Breakfast Inns**	3-32
3:3.4	**Family Daycare Homes**	3-34
3:3.4-1	Definition	3-34
3:3.4-2	Regulations for Family Daycare Homes	3-34
3:3.5	**Camps and Recreational Vehicle Parks**	3-34
3:3.6	**Mobile Homes**	3-35
3:3.6-1	Replacement of Mobile Homes	3-35
3:3.7	**Park Model Homes**	3-35
3:3.8	**Manufactured Housing Parks**	3-36
3:3.9	**Mini-Warehouses**	3-37
3:3.10	**Open Storage Areas**	3-37
3:3.11	**Wrecking, Scrap, and Salvage Operations**	3-37
3:3.12	**Communication Towers and Antennas**	3-38
3:3.13	**Rural and B-3 Business Uses**	3-40
3:3.14	**Agricultural Facilities**	3-40
3:3.14-1	Agricultural Facility as Defined by SC Code of Law, Section 46-45-20	3-40
3:3.14-2	Conditional Uses for Swine Operations	3-41
3:3.15	**Vendors and Seasonal Roadside Stands**	3-42
3:3.15-1	Vendors	3-42
3:3.15-2	Seasonal Roadside Stands	3-42
3:3.16	**Patio and Zero Lot Line Housing**	3-43
3:3.17	**Townhouses**	3-44
3:3.18	**Manufacturing Facilities**	3-44
Table 3-7	Table 3-7, Maximum Continuous Sound Pressure Levels – Night Time	3-45
Table 3-8	Table 3-8, Maximum Sound Pressure Level Exceptions – Day Time	3-46
Table 3-9	Table 3-9, Maximum Intensity for Exterior Lights	3-47
3:3.19	**Construction and Demolition Landfills**	3-47
3:3.20	**Municipal Solid Waste Landfills**	3-48
3:3.21	**Sexually Oriented Businesses**	3-48
3:3.22	**Animal Spectator Events in Rural Zoning Districts**	3-50
3:3.22-1	Animal Spectator Events	3-50
3:3.23	**General Merchandise Auctions in Rural Zoning Districts**	3-51
3:3.24	**Motor Vehicle Towing Services in B-2 Zoning Districts**	3-52
3:3.25	**Agricultural Products Auctions in Rural Zoning Districts**	3-53
3:4	**SIGN REGULATIONS**	3-54
3:4.1	**Intent**	3-54
3:4.1-1	Applicability and Conformance	3-54
3:4.1-2	Definition	3-54
3:4.1-3	Permit or Registration Required	3-54
3:4.2	**Signs Requiring a Permit**	3-55
3:4.2-1	Freestanding Signs	3-55
3:4.2-2	Signs on Building Walls	3-56
3:4.2-3	Hanging Signs	3-56
3:4.2-4	Projecting Signs	3-57

3:4.2-5	Signs on Perimeter or Retaining Walls and Fences	3-57
3:4.2-6	Signs on Awnings, Canopies, and Marquees	3-58
3:4.2-7	Changeable Copy Signs	3-58
3:4.2-8	Message Board Signs for Institutional Use	3-59
3:4.2-9	Bed and Breakfast Inn Signs	3-60
3:4.2-10	Directional Signs for Religious Institutions	3-60
3:4.2-11	Home Occupation and In-Home Family Day Care Signs	3-60
3:4.2-12	Multiple Occupant Development Directory Signs	3-60
3:4.2-13	Outdoor Drive-Thru Menu Boards	3-61
3:4.2-14	Planned Development District (PDD) Signs	3-62
3:4.2-15	Residential Development Entrance Signs	3-62
3:4.2-16	Time and Temperature Signs	3-62
3:4.2-17	On-Site Business Signs Located Adjacent to an Interstate Highway Interchange	3-62
3:4.3	**Signs Not Requiring a Permit or Registration**	3-63
3:4.3-1	Regulations for Signs that Do Not Require a Permit or Registration	3-63
3:4.3-2	Signs that Do Not Require a Permit or Registration	3-63
Table 3-10	Table 3-10, Permanent Signs: Maximum Allowed Size and Number	3-65
3:4.4	**Temporary Signs**	3-65
3:4.4-1	Temporary Sign Regulations	3-65
3:4.4-2	Temporary Signs Requiring Registration	3-66
3:4.4-3	Temporary Signs Not Requiring Registration	3-69
3:4.5	**Prohibited Signs**	3-71
3:4.5-1	Prohibited Signs and Prohibited Sign Characteristics	3-71
3:4.6	**Signs Located in the Public Right-of-Way and on Public Property**	3-73
3:4.6-1	Regulations for Signs in the Public Right-of-Way and on Public Property	3-73
3:4.6-2	Signs Permitted in the Public Right-of-Way and on Public Property	3-73
3:4.7	**Sign Measurements**	3-74
3:4.7-1	Sign Height	3-74
3:4.7-2	Sign Clearances	3-74
3:4.7-3	Sign Frame Area	3-74
3:4.7-4	Sign Surface Area	3-75
3:4.7-5	Double-Sided Signs	3-75
3:4.7-6	Multiple Cabinet Signs	3-76
3:4.7-7	Round, Cube, and Other 3-D Signs	3-76
3:4.7-8	Individual Element Signs	3-76, 3-77
3:4.7-9	Signs on a Base Material	3-77
3:4.7-10	Signs on Awnings, Canopies, and Marquees	3-77
3:4.8	**Placement of Signs**	3-77
3:4.8-1	Placement	3-77
3:4.8-2	Signs in the Public Right-of-Way	3-77
3:4.8-3	Visibility at Intersections	3-77
3:4.8-4	Pedestrian Area Clearance	3-80
3:4.8-5	Use of Buffer Areas	3-80
3:4.9	**Illumination of Signs**	3-80
3:4.9-1	Illumination Regulations	3-80
Table 3-11	Table 3-11, Sign Illumination Standards	3-80 thru 81

3:4.10	**Sign Materials**	3-81
3:4.10-1	Code Compliance	3-81
3:4.11	**Existing Nonconforming Signs**	3-81
3:4.11-1	Regulations for Existing Nonconforming Signs	3-81
3:4.11-2	Off-Premise Advertising	3-82
3:4.12	**Maintenance and Upkeep of Signs**	3-82
3:4.12-1	Maintenance and Upkeep Regulations	3-82
3:4.13	**Removal of Signs**	3-83
3:4.13-1	Sign Removal Regulations	3-83
3:4.14	**Administration and Enforcement**	3-83
3:4.14-1	Permits and Registration	3-83
3:4.14-2	Application Requirements for a Sign Permit	3-84
3:4.14-3	Sign Permit Certification	3-84
3:4.14-4	Application Requirements for Sign Registration	3-84
3:4.14-5	Fees	3-84
3:4.14-6	Violations	3-85
3:4.14-7	Inspections	3-85
3:4.15	**Sign Definitions**	3-85
3:5	**BUFFERING, SCREENING, OPEN SPACE, AND LANDSCAPING REGULATIONS**	3-90
3:5.1	**Buffer Areas**	3-90
3:5.1-1	Applicability	3-90
3:5.1-2	Party Responsible for Installation	3-90
3:5.1-3	Zoning Change	3-90
3:5.1-4	Location	3-91
3:5.1-5	Design Standards	3-91
Table 3-12	Table 3-12, Buffer Width and Plant Material Requirements	3-92
3:5.1-6	Specifications	3-93
Table 3-13	Table 3-13, Perimeter Buffer Area Requirements: Proposed Non-Residential Uses	3-94
Table 3-14	Table 3-14, Perimeter Buffer Area Requirements: Proposed Residential Uses	3-94
Table 3-15	Table 3-15, Street Buffer Type Requirements: Proposed Residential and Non-Residential Uses	3-95
3:5.1-7	Substitutions and Variations	3-95
3:5.1-8	Required Maintenance	3-97
3:5.1-9	Use of Buffer Areas	3-97
3:5.1-10	Easements	3-97
3:5.1-11	Visibility at Intersections	3-97
3:5.2	**Screening**	3-100
3:5.2-1	Where Required	3-100
3:5.2-2	Type Screening Required	3-100
3:5.3	**Non-Residential Landscaping**	3-100
3:5.3-1	Where Required	3-100
3:5.3-2	Landscaping Plan	3-101
3:5.3-3	Cluster Developments	3-101
3:5.3-4	Interior Landscaping	3-101
3:5.3-5	Signage Landscaping	3-102
3:5.3-6	Required Maintenance	3-103
3:5.4	**Residential Common Open Space**	3-103

3:5.4-1	Where Required	3-103
Table 3-16	Table 3-16, Common Open Space: Amount Required	3-104
3:5.4-2	Applicability of Open Space Requirements	3-104
3:5.4-3	Common Open Space Plan	3-104
3:5.4-4	Types of Common Open Space and Required Maintenance	3-105
3:5.4-5	Preservation of Open Space	3-105
3:5.4-6	Residential Major Subdivision Reverse Frontage Lots	3-106
3:5.5	**Utilization of Buffers, Screening, and Open Space for Stormwater Management**	3-106
3:5.6	**Definitions**	3-106
3:6	**OFF-STREET PARKING REGULATIONS**	3-107
3:6.1	**Off-Street Parking**	3-107
3:6.1-1	General Requirements	3-107
3:6.1-2	Land to Provide Parking	3-108
3:6.2	**Design Standards**	3-108
Table 3-17	Table 3-17, Off-Street Parking: Minimum Aisle Widths	3-108
3:6.3	**Maintenance**	3-109
3:6.4	**Parking Spaces for the Physically Handicapped**	3-110
Table 3-18	Table 3-18, Required Number of Handicapped Spaces	3-110
3:6.5	**Off-Street Loading**	3-110
3:6.6	**Approval of Parking and Off-Street Loading Plans and Layouts**	3-110
3:6.7	**Parking, Storage, and Use of Recreational Vehicles and Boats**	3-111
3:6.7-1	In Commercial and Residential Zones	3-111
3:6.7-2	In Rural Zones	3-111
3:6.8	**Parking, Storage, and Use of Non-Recreational Vehicles and Equipment**	3-111
3:6.8-1	Inoperable Vehicles and Vehicles without Current License Plates	3-111
3:6.8-2	Vehicles on Blocks, Jacks, or any Suspension Other than Their Own	3-112
3:6.8-3	Vehicles Used for Commercial, Industrial, Farm, or Construction Purposes	3-112
3:6.8-4	Implements and/or Equipment Used for Commercial, Industrial, Agri-cultural, or Construction Purposes	3-112
3:7	**SPECIAL PURPOSE DISTRICT REGULATIONS**	3-112
3:7.1	**Airport Overlay District**	3-112
3:7.1-1	Types of Zones	3-112
3:7.1-2	Height Limitations	3-114
3:7.1-3	Use Regulations	3-114
3:7.1-4	Nonconforming Uses	3-114
3:7.2	**Historic Overlay Districts**	3-114
3:7.2-1	Type of District; Permitted Uses	3-114
3:7.2-2	Intent of Historic Overlay District	3-114
3:7.2-3	Establishment of a Historic Overlay District	3-115
3:7.2-4	Certificate of Appropriateness Required	3-115
3:7.2-5	Powers and Duties of the Planning and Zoning Commission	3-115
3:7.2-6	General Review Standards for Appropriateness	3-115
3:7.2-7	General Design Standards for Appropriateness	3-116
3:7.2-8	Certain Work Exempt from Commission Review	3-117
3:7.2-9	Development and Dimensional Standards	3-117
3:7.2-10	Unreasonable Hardship	3-117
3:7.2-11	Applications and Materials to be Submitted to the Commission	3-117

3:7.2-12	General Certification of Appropriateness	3-118
3:7.3	**Planned Development Districts (PDDs)**	3-118
3:7.3-1	Permitted Uses in Planned Development Districts	3-118
3:7.3-2	Establishment of Planned Development Districts	3-119
3:7.3-3	Minimum Area Required	3-119
3:7.3-4	Development Standards	3-119
A.	Density and Height Requirements	3-119
B.	Overall Site Design	3-119
C.	Parking and Loading	3-119
D.	Buffer Areas	3-119
E.	Streets and Street Improvements	3-119
F.	Landscaping and Common Open Space	3-120
G.	Signage	3-120
3:7.3-5	Site Plan Requirements	3-120
3:7.3-6	Action by Planning and Zoning Commission and County Council	3-120
3:7.3-7	Development of Approved Planned Development District	3-121
3:7.3-8	Changes in Approved Planned Development District Plans	3-121
A.	Minor Changes	3-121
B.	Major Changes	3-121
3:7.3-9	Expiration of Time Limits on Planned Development District Amendments	3-121
3:7.3-10	Vested Right	3-122
3:7.3-11	Revocation	3-122
3:7.3-12	Applicability of Other Regulations	3-122
3:7.3-13	Vested Right to Run with Property	3-122
3:7.4	**Lake Wateree Overlay District**	3-123
3:7.4-1	Authority	3-123
3:7.4-2	Establishment of Lake Wateree Overlay District	3-123
3:7.4-3	Compliance with Duke Energy Shoreline Management Plan	3-123
3:7.4-4	Group Development Guidelines for the Lake Wateree Overlay District	3-123
3:7.4-5	Resource Conservation	3-124
3:7.4-6	Lake Wateree Shoreline Buffer Regulations	3-124
A.	Applicability	3-124
B.	Undeveloped Parcels	3-124
1.	General Requirements	3-124
2.	Disturbance of Buffers	3-124
a.	General Exceptions	3-125
1.)	Tree Removal	3-125
2.)	Underbrush Removal	3-125
3.)	Pruning and Trimming	3-125
4.)	Emergency Operations	3-125
5.)	Eminent Domain	3-125
b.	Exceptions Requiring a Permit	3-125
1.)	View Corridors	3-125
2.)	Access Corridors	3-126
a.)	Tree Removal	3-126
b.)	Standards	3-126
3.)	Separation Between Corridors	3-126
4.)	Shoreline Bank Stabilization	3-126

5.)	Nonconforming Structures	3-126
6.)	Water-Dependent Structures	3-127
7.)	Exceptions for Public Recreational Facilities	3-127
a.)	Purpose	3-127
b.)	Modification of Buffer Boundaries	3-127
c.)	Location of Facilities	3-127
d.)	Access and View Corridors at Public Recreational Facilities	3-127
i.	Access Corridors	3-127
ii.	View Corridors	3-127
e.)	Stormwater Management	3-127
f.)	Review and Approval of Public Recreational Facility Master Plans	3-128
c.	Approval Procedures for Permitted Activity	3-128
d.	Restoration of Previously Disturbed Buffers	3-128
1.)	Applicability	3-128
2.)	Restoration Plan	3-129

Table 3-19	Table 3-19, Vegetation Densities for Restoration Buffers Disturbed Prior to Development	3-130
3.)	Minimum Mature Size	3-130
4.)	Maintenance of Restored Buffer	3-130
C.	Developed Parcels	3-130
1.	Nonconforming Structures	3-130
2.	Non-encroachment	3-130
3.	Water-Dependent Structures	3-131
4.	Enhancement of Buffers on Developed Single-Family Residential Parcels	3-131
a.	Expansion of Non-Conforming Principle Residential Structures within the Buffer Area	3-131
5.	Restoration of Buffers on Previously Developed Multi-Family or Non-Residential Parcels	3-131
a.	Applicability	3-131
b.	Restoration Plan	3-132
Table 3-20	Table 3-20, Vegetation Densities for Previously Developed Multi-Family and Non-Residential Parcels	3-132
c.	Minimum Mature Size	3-133
d.	Maintenance of Restored Buffer	3-133
D.	Protection of Shoreline Buffers during Site Development and Construction Activity	3-133
E.	Shoreline Buffer Plat Requirements	3-133
3:7-4-7	Sediment and Erosion Controls for Residential Lot Development	3-134
A.	Residential Building Sediment and Erosion Control Certification	3-134
3:7-4-8	Lake Wateree Overlay District On-Site Sewage Disposal System Regulations	3-135
A.	Definitions	3-135
B.	Applicability	3-136
C.	New Installations	3-136
D.	Inspections of Existing Installations	3-136

1.	Inspections Prior to Sale of Real Estate Interest	3-136
a.	Minor Repairs or Alterations	3-137
b.	Failure Evaluation and Repairs	3-137
2.	Inspections Prior to Renovations	3-137
a.	Minor Repairs or Alterations	3-137
b.	Failure Evaluation and Repairs	3-137
3.	Inspections Prior to Change of Occupancy	3-138
a.	Minor Repairs or Alterations	3-138
b.	Failure Evaluation and Repairs	3-138
4.	Time Between Inspections	3-138
5.	Specialized (Engineered) Onsite Wastewater Systems	3-138
3:7-4-9	Compliance, Penalties, and Violations	3-139

TABLE OF CONTENTS

ARTICLE 4	**BUILDINGS AND BUILDING REGULATIONS**	4-1
4:1	**GENERAL PROVISIONS**	4-1
4:1.1	**Definitions**	4-1
4:1.2	**Permit Required**	4-1
4:1.3	**Expiration of Building Permit**	4-1
4:1.4	**Compliance Required**	4-2
4:1.5	**Applicant**	4-2
4:1.6	**Building Permit Procedure**	4-2
4:2	**RESIDENTIAL BUILDINGS**	4-3
4:2.1	**Site-Built Housing**	4-3
4:2.2	**Modular Housing/Buildings**	4-3
4:2.3	**Manufactured Housing Installation, License, and Registration**	4-3
4:2.3-1	Applicant	4-3
4:2.3-2	Installer License	4-3
4:2.3-3	Process	4-3
4:2.3-4	Expiration of Permit	4-4
4:2.3-5	Set Up	4-4
4:2.3-6	Appearance Standards for Manufactured Housing in the GD and MRD-1 Zoning Districts	4-5
4:2.3-7	Habitability	4-5
4:2.3-8	Compliance Required	4-6
4:2.3-9	Registration and License	4-6
4:2.4	**Mobile Homes**	4-6
4:2.4-1	Replacement of Mobile Homes	4-7
4:2.5	**Existing Septic Tanks**	4-7
4:2.5-1	Definitions	4-7
4:2.5-2	Procedures for Existing Septic Tanks	4-7
4:2.5-3	Inspection Procedure	4-8
4:3	**GROUP DEVELOPMENTS**	4-8
4:3.1	**Applicant**	4-8
4:3.2	**Major Group Developments**	4-8
4:3.2-1	Definition of Major Group Development	4-8
A.	Commercial, Industrial, Institutional	4-9
B.	Housing	4-9
4:3.2-2	Procedure for Major Group Developments	4-9
4:3.3	**Minor Group Developments**	4-9
4:3.3-1	Definition of Minor Group Developments	4-9
4:3.3-2	Procedure for Minor Group Developments	4-9
4:4	**BUILDING PERMIT INSPECTIONS FOR COMPLIANCE**	4-10
4:4.1	**Compliance Inspection**	4-10
4:4.2	**Compliance Certification**	4-10
4:4.2-1	Certification Required	4-10
4:4.3	**Certificate of Occupancy**	4-10
4:4.4	**Compliance Certifications for Demolition, Moving, Sign, and Other Land Development Permits**	4-10
4:4.5	**Use Permits**	4-11

4:4.5-1	Use Permits for Multi-Occupancy Establishments	4-11
4:4.5-2	Single Occupancy Use Permits for Change of Occupancy, Change of Use, or Conditional Uses	4-11
4:5	**DEMOLITION PERMITS**	4-12
4:5.1	**Demolition Permit Applications for Structures other than Manufactured Housing**	4-12
4:5.1-1	Permit Certification	4-12
4:5.2	**Demolition Permit Application for Manufactured Housing**	4-12
4:5.2-1	Permit Certification	4-13
4:6	**MOVING PERMITS**	4-13
4:6.1	**Moving Permit Application for Structure other than Manufactured Housing**	4-13
4:6.1-1	Permit Certification	4-14
4:6.2	**Moving Permit Application for Manufactured Housing**	4-14
4:7	**FEES**	4-15

TABLE OF CONTENTS

ARTICLE 5	**LAND DEVELOPMENT REGULATIONS**	
5:1	**REGULATIONS FOR THE SUBDIVISION OF LAND AND THE CREATION OF LOTS**	5-1
5:1.1	**Definition of Subdivision, SC Code of Law 6-29-1110**	5-1
5:1.1-1	Exceptions (under SC Code of Laws 6-29-1110)	5-1
5:1.1-2	Kershaw County Exemptions	5-1
5:1.2	**Lots**	5-2
5:1.2-1	Applicability	5-2
5:1.2-2	Definitions	5-2
5:1.2-3	Accessibility	5-3
5:1.2-4	Dimensions	5-3
5:1.2-5	Design	5-3
5:1.2-6	Flag Lots and Access Easements	5-3
5:1.2-7	Conditions for Allowing Flag Lots and Access Easements	5-3
5:1.2-8	Appeal to Planning and Zoning Commission	5-5
5:1.2-9	Subdivision of Lots, Parcels, and Tracts on Existing County Unimproved (Dirt) Roads	5-5
5:1.2-10	Residential Major Subdivision Reverse Frontage Lots	5-5
5:1.2-11	Alignment	5-5
5:1.2-12	Subdivision of Lots Requiring a Water Quality Buffer	5-5
5:1.3	**Areas Subject to Flooding**	5-6
5:1.3-1	General	5-6
5:1.3-2	Plat of Flood Hazard Areas	5-6
5:1.3-3	Prevention of Expansion of Flood Hazard Areas	5-6
5:1.4	**Water Supply**	5-6
5:1.4-1	SCDHEC Approval Required	5-6
5:1.4-2	When Required to Connect to Community Water Supply System	5-6
Table 5-1	Table 5-1, Community Water Supply System Connection Requirements	5-6
5:1.4-3	System Requirements	5-6
5:1.4-4	System Approval Required	5-7
5:1.4-5	System to Include Fire Hydrants	5-7
5:1.5	**Sanitary Sewer Facilities**	5-7
5:1.5-1	SCDHEC Approval Required	5-7
5:1.5-2	When Required to Connect to Community Sewerage System	5-7
Table 5-2	Table 5-2, Community Sewerage System Connection Requirements	5-7
5:1.5-3	System Requirements	5-7
5:1.5-4	System Approval Required	5-7
5:1.5-5	Kershaw County Requirements for Community Onsite Sewage Treatment and Disposal Systems	5-8
5:1.6	**Street Lighting**	5-8
5:1.7	**New Subdivision and Land Development Names**	5-8
5:1.8	**Utility Easements and Rights-of-Ways**	5-8
Table 5-3	Table 5-3, Drainage Easement Width Per Pipe Size and Depth	5-11
5:1.8-1	Maintenance of Easements and Rights-of-Way	5-11
5:1.9	**Surveys and Markings**	5-11

TABLE OF CONTENTS

5:2	**LAND DEVELOPMENT SUBMITTAL REQUIREMENTS AND APPROVAL PROCESS**	5-24
5:2.1	**General Application Process**	5-24
5:2.1-1	Purpose	5-24
5:2.1-2	Application Process	5-24
A.	Pre-Application Conference and Sketch Plan Review	5-24
1.	Pre-Application Conference	5-24
2.	Sketch Plan Review	5-24
B.	Applications	5-24
C.	Review	5-24
Table 5-4	Table 5-4, Land Development Review and Approval Responsibilities	5-24
5:2.2	**Exempt Subdivisions**	5-25
5:2.2-1	State Law Exemptions (under SC Code of Law 6-29-1110)	5-25
5:2.2-2	Kershaw County Exemptions	5-25
5:2.2-3	Submittal Requirements	5-25
5:2.2-4	Approval Process	5-26
5:2.3	**Minor Subdivisions**	5-26
5:2.3-1	Definition of Minor Subdivision	5-26
5:2.3-2	Submittal Requirements	5-26
5:2.3-3	Approval Process	5-27
5:2.4	**Major Subdivisions**	5-27
5:2.4-1	Definition of Major Subdivision	5-27
5:2.4-2	Sketch Plan Review	5-27
A.	Submittal Requirements	5-27
B.	Sketch Plan	5-27
1.	Sketch Plan General Information	5-27
2.	Site Information	5-27
3.	Planned Improvements	5-28
4.	Phased Development	5-28
C.	Sketch Plan Approval Process	5-28
5:2.4-3	Preliminary Plans	5-29
A.	General Submittal Requirements	5-29
B.	Submittal and Distribution	5-29
C.	The Preliminary Plat	5-29
1.	General Information	5-30
2.	Site Information	5-30
3.	Planned Improvements	5-30
5:2.4-4	Construction Plans	5-31
5:2.4-5	Preliminary Plan Approval Procedure	5-32
5:2.4-6	Final Plat	5-33
A.	**Submittal Requirements**	5-33
B.	**Plat Information**	5-33
1.	General Information	5-33
2.	Site Information	5-34
3.	Surveyor Certification	5-34
4.	Certificate of Approval for Recording	5-34

5.	Certificate of Ownership and Dedication	5-35
6.	Certification for Private Roads and Facilities	5-35
7.	Sewer Easement Certification	5-35
5:2.4-7	Final Plat Approval Procedure	5-36
5:2.4-8	Appeal to Planning and Zoning Commission	5-37
5:2.5	**Large Acreage Single Family Residential Developments on Private Roads**	5-37
5:2.5-1	Large Acreage Single Family Residential Development Criteria	5-37
5:2.5-2	Preliminary Plans	5-38
A.	Submittal Requirements	5-38
1.	General Information	5-38
2.	Site Information	5-39
3.	Planned Improvements	5-39
5:2.5-3	Preliminary Plan Approval Procedure	5-39
5:2.5-4	Final Plat	5-40
A.	Submittal Requirements	5-40
B.	Plat Information	5-40
1.	General Requirements	5-40
2.	Site Information	5-40
3.	Surveyor Certification	5-41
4.	Certificate of Approval for Recording	5-41
5.	Certification for Private Roads and Facilities	5-41
6.	Sewer Easement Certification	5-42
5:2.5-5	Final Plat Approval Procedure	5-42
5:2.5-6	Appeal to Planning and Zoning Commission	5-43
5:2.6	**Group Developments**	5-43
5:2.6-1	Major and Minor Group Developments Defined	5-43
A.	Major Group Developments	5-43
1.	Commercial, Industrial, Institutional	5-43
2.	Housing	5-43
B.	Minor Group Developments	5-43
5:2.6-2	Minor Group Development Approval Process	5-44
5:2.6-3	Major Group Development Approval Process	5-44
A.	Submittal Requirements	5-44
1.	Zoning and Land Development Site Plan for Major Group Developments	5-45
2.	General Site Plan Information	5-45
3.	Landscaping	5-45
4.	Parking	5-45
5.	Signage	5-46
B.	Approval Process	5-46
1.	Planning and Zoning Commission Review	5-46
2.	Engineering Plans	5-46
3.	Approval	5-48
1.)	Certification of Ownership and Dedication	5-48
2.)	Sewer Easement Certification	5-48
5:2.7	**Development of Planned Development Districts**	5-49
5:2.7-1	Planned Development Site Plan	5-49
5:2.7-2	Preliminary Plan	5-50

A.	General Submittal Requirements	5-50
B.	Submittal and Distribution	5-50
C.	The Preliminary Plat	5-51
1.	General Information	5-50
2.	Site Information	5-51
3.	Planned Improvements	5-51
5:2.7-3	Construction Plans	5-52
5:2.7-4	Preliminary Plan Approval Procedure	5-53
5:2.7-5	Final Plat	5-54
A.	Submittal Requirements	5-54
B.	Plat Information	5-55
1.	General Information	5-55
2.	Site Information	5-55
3.	Surveyor Certification	5-55
4.	Certificate of Approval for Recording	5-55
5.	Certificate of Ownership and Dedication	5-56
6.	Certification for Roads and Facilities	5-56
7.	Sewer Easement Certification	5-56
5:2.7-6	Final Plat Approval Procedure	5-57
A.	Performance Financial Guarantee	5-57
5:2.8	**Traffic Management Plan**	5-58
5:2.8-1	Purpose	5-58
5:2.8-2	Determination of Need for Requiring a Traffic Management Plan	5-59
A.	Conference	5-59
1.	Calculation of LOS	5-59
2.	Alternative Method for Calculation of LOS	5-59
B.	Evaluation	5-59
5:2.8-3	Action by the Planning and Zoning Commission	5-59
5:2.8-4	Planning and Zoning Commission Approval of Traffic Management Plan	5-60
5:2.8-5	Coordination with South Carolina Department of Transportation	5-60
5:2.8-6	Transportation Management Plan Report	5-60
5:2.9	**Adequate Public Facilities**	5-61
5:2.9-1	Purpose	5-61
5:2.9-2	Applicability	5-62
5:2.9-3	Impact Assessments	5-62
5:2.9-4	Planning and Zoning Commission Consideration of Impact Assessments	5-62
5:2.10	**Environmental Impact Assessments**	5-63
5:2.11	**Development Agreements**	5-63
5:2.11-1	Minimum Requirements	5-63
Table 5-5	Table 5-5, Maximum Term of Development Agreement by Size of Project	5-63
5:2.11-2	Procedures for Adoption of Development Agreements	5-64
A.	Drafting of Agreement	5-64
B.	Planning and Zoning Commission Public Hearing	5-64
C.	Planning and Zoning Commission Recommendations to County Council	5-64
D.	County Council Public Hearing	5-64
E.	Development Agreement Ordinance	5-64
F.	Recording of Development Agreement	5-64
5:2.11-3	Annual Review	5-64

A.	Notice of Breach	5-65
B.	Corrective Action Plan	5-65
C.	Termination of Agreement	5-65
5:2.12	**Improvement Guarantees**	5-65
5:2.12-1	Planning Staff	5-65
5:2.12-2	Policy	5-65
5:2.12-3	Financial Guarantees	5-66
5:2.12-4	Option to Refuse Guarantee	5-66
5:2.12-5	Default of Guarantee	5-67
5:2.12-6	Allocation of Guarantee	5-67
5:2.12-7	Extension of Guarantee	5-67
5:2.12-8	Acceptable Format for Improvement Guarantee	5-67
5:2.12-9	Acceptable Format for an Improvement Guarantee Utilizing an Irrevocable Letter of Credit	5-68
5:2.12-10	Approval for Recording	5-69
5:2.12-11	Release of Improvement Guarantee	5-69

TABLE OF CONTENTS

5:3	**LAND DEVELOPMENT DESIGN STANDARDS AND REQUIRED IMPROVEMENTS**	5-81
5:3.1	**Purpose**	5-81
5:3.2	**Site Design**	5-81
5:3.2-1	Site Design, Generally	5-81
5:3.2-2	Site Analysis	5-81
Table 5-6	Table 5-6, Site Analysis Key Components and Design Objectives	5-82
5:3.3	**Conservation Subdivision and Group Development Design**	5-83
5:3.3-1	Conservation Design	5-83
5:3.3-2	Purpose	5-83
5:3.3-3	Applicability	5-83
5:3.3-4	Process	5-84
5:3.3-5	Compliance	5-85
Table 3-5	Table 3-5, Scheduled Lot Area, Yard Setback, Height, Density, Floor Area, and Impervious Surface Requirements by District for Residential Uses - Conservation Design	5-86
5:3.4	**Tree Protection**	5-87
5:3.4-1	Findings and Intent	5-87
5:3.4-2	Tree Protection Definitions	5-87
5:3.4-3	Existing Significant Trees	5-87
5:3.4-4	Unlawful to Cut, Generally	5-87
5:3.4-5	Significant Tree Protection Zones	5-87
5:3.4-6	Exemption for the Removal of Existing Significant Trees	5-88
5:3.4-7	Significant Trees Removed without Permits	5-88
5:3.4-8	Tree Fund	5-89
5:3.4-9	Tree and Root Protection Prior to Development	5-89
5:3.4-10	Forestry Activity	5-90
5:3.5	**Phased Clearing**	5-90
5:3.5-1	Clearing Plan	5-90
5:3.5-2	Site Clearing Pre-Development Phase	5-91
5:3.5-3	Infrastructure Construction Phase	5-91
5:3.5-4	Building Phase	5-91
5:3.6	**Water Quality Buffers**	5-92
5:3.6-1	Basic Requirements for Water Quality Buffers	5-92
A.	Applicability	5-92
1.	Perennial Streams	5-92
a.	Exception: Perennial Streams on Individual Lots Under 3 Acres	5-92
2.	Intermittent Streams	5-92
a.	Exception: Intermittent Streams on Individual Lots Under 3 Acres	5-93
3.	Shoreline Buffers	5-93
a.	Exception: Shoreline Buffers on Individual Lots Under 3 Acres	5-93
4.	Floodways and Wetlands Associated with Perennial and Intermittent Streams	5-93
B.	Exception to Required Buffer Width	5-93
5:3.6-2	Disturbance of Buffers	5-94
A.	General Exceptions	5-94

1.	Tree Removal	5-94
2.	Underbrush Removal	5-94
3.	Pruning and Trimming	5-94
4.	Emergency Operations	5-94
B.	Exceptions to Requiring a Permit	5-94
1.	View Corridors	5-94
2.	Access Corridors	5-95
a.	Tree Removal	5-95
b.	Standards	5-95
3.	Separation Between Corridors	5-95
4.	Stream Bank Stabilization	5-95
5.	Stream Crossings and Utilities Easements	5-96
6.	Stream Relocation	5-96
7.	Exceptions for Public Recreational Facilities	5-97
a.	Purpose	5-97
1.)	Modification of Buffer Boundaries	5-97
2.)	Location of Facilities	5-97
3.)	Access and View Corridors at Public Recreational Facilities	5-97
4.)	Stormwater Management	5-97
5.)	Review and Approval of Public Recreational Facility Master Plans	5-98
C.	Approval Procedures for Permitted Activity	5-98
D.	Water Quality Buffer Plat Requirements	5-98
E.	Enhancement of Buffers	5-99
F.	Protection of Water Quality Buffers During Site Development and Construction Activity	5-99
5:3.7	**Stormwater Management Standards**	5-100
5:3.7-1	Definitions	5-100
5:3.7-2	General Storm Draining Design	5-101
5:3.7-3	Design Features	5-102
5:3.7-4	Design Storm Standards	5-102
5:3.7-5	Storm Drainage Calculations	5-103
Table 5-7	Table 5-7, Ranges of Rational Method Runoff Coefficients (“C”)	5-105
Table 5-8	Table 5-8, Rainfall Intensity for Kershaw County	5-105
5:3.7-6	System Capacity	5-105
5:3.7-7	Storm Drainage Pipes	5-106
5:3.7-8	Headwalls	5-107
5:3.7-9	Catch Basins, Drop Inlets, and Junction Boxes	5-107
5:3.7-10	Open Channels	5-109
5:3.7-11	Detention Ponds	5-109
5:3.7-12	Retention Ponds	5-110
5:3.7-13	Water Quality Ponds	5-111
5:3.7-14	Forebays	5-111
5:3.7-15	Subsurface Percolation Systems	5-111
5:3.7-16	Stagnant Water Conditions	5-111
5:3.7-17	Drainage Easements	5-112
Table 5-9	Table 5-9, Drainage Easement Width per Pipe Size and Depth	5-112
5:3.7-18	Hydric Soil Groups for Kershaw County	5-112
5:3.7-19	Erosion Prevention and Sediment Control Design	5-112

5:3.7-20	Maintenance	5-115
5:3.7-21	As-Built Engineering Plans	5-116
5:3.7-22	Standard Details	5-117
5:3.8	**Street Standards**	5-127
5:3.8-1	Definition of Street	5-127
5:3.8-2	Street Classifications	5-127
5:3.8-3	General Design Criteria	5-127
5:3.8-4	Right-of-Way	5-128
5:3.8-5	Required Street Improvements	5-128
5:3.8-6	Road Construction Standards	5-129
Table 5-10	Table 5-10, Road Design Thickness Requirements	5-129
Table 5-11	Table 5-11, Soils Unsuitable for Road Construction	5-130
5:3.8-7	Road Design Standards	5-133
Table 5-12	Table 5-12, Roadway Design Criteria	5-133
Table 5-13	Table 5-13, Width of Road by Curb Type	5-133
Table 5-14	Table 5-14, Horizontal Curve Radii	5-134
Table 5-15	Table 5-15, Vertical Curves	5-135
Table 5-16	Table 5-16, Superelevation	5-135
5:3.8-8	Intersection Design	5-137
Table 5-17	Table 5-17, Intersection Design	5-137
Table 5-18	Table 5-18, Additional Sight Measurements	5-140
5:3.8-9	Road Entrance Islands and Medians	5-140
5:3.8-10	Cul-de-Sac Islands	5-140
5:3.8-11	Shoulders	5-141
5:3.8-12	Street Signs	5-142
5:3.8-13	Street Names	5-142
5:3.8-14	Blocks	5-142
5:3.8-15	As-Built Engineering Plans	5-142
5:3.9	**Driveway Standards**	5-143
5:3.9-1	Definition of Driveway	5-143
5:3.9-2	Driveway Width	5-143
5:3.9-3	Number of Drives	5-143
5:3.9-4	Joint Use of Driveways/Connectivity	5-144
5:3.9-5	Driveway Separation	5-144
Table 5-19	Table 5-19, County Road Driveway Spacing Requirements	5-144
5:3.10	**Underground Wiring**	5-144
5:3.10-1	Where Required	5-144
5:3.10-2	Exceptions	5-145
5:3.11	**Gate Access Standards for Gated Communities**	5-145
5:3.12	**Utility Easements and Rights-of-Way**	5-146
Table 5-20	Table 5-20, Drainage Easement Width per Pipe Size and Depth	5-148
5:3.12-1	Maintenance of Easements and Rights-of-Way	5-149
5:3.13	**Surveys and Markings**	5-149
5:3.14	**Sidewalks and Paths**	5-149

TABLE OF CONTENTS

ARTICLE 6	**ADMINISTRATION**	6-1
6-1	**ADMINISTRATION OF ORDINANCE**	6-1
6:1.1	**Planning Official**	6-1
6:1.2	**Board of Zoning Appeals**	6-1
6:1.2-1	Proceedings of the Board of Zoning Appeals	6-2
6:1.2-2	Appeals to the Board of Zoning Appeals; Hearings and Notices	6-2
6:1.2-3	Powers and Duties of the Board of Zoning Appeals	6-2
6:1.2-4	Decisions of the Board of Zoning Appeals	6-3
6:1.3	**Right to Appeal**	6-4
6:1.3-1	Appeal to the Board of Zoning Appeals	6-4
6:1.3-2	Appeal to Circuit Court and Pre-Litigation Mediation	6-4
6:1.3-3	Appeal to the Building Codes Board of Adjustments and Appeals	6-4
6:1.3-4	Appeal to the Planning and Zoning Commission	6-4
6:1.3-5	Appeal to County Council	6-4
6:1.3-6	Exceptions Granted by the Planning and Zoning Commission	6-4
6-2	**AMENDMENTS**	6-5
6-2.1	**Zoning Map Amendments**	6-5
6:2.1-1	Initiation of Map Amendment	6-5
6:2.1-2	Application Procedure	6-5
6:2.1-3	Review by the Planning and Zoning Commission	6-5
6:2.1-4	Report of the Planning and Zoning Commission	6-5
6:2.1-5	Notice of Public Hearing	6-6
6:2.1-6	Action by County Council	6-6
6:2.2	**Ordinance Text Amendments**	6-6
6:2.2-1	Referral to Planning and Zoning Commission	6-6
6:2.2-2	Public Hearing	6-6
6:2.2-3	Action by County Council	6-7
6:3	**ADMINISTRATIVE FEES**	6-7
6:3.1	**Continuance of Fees**	6-8
6:4	**VIOLATIONS AND PENALTIES**	6-8
6:4.1	**Processing of Violations**	6-8
6:4.2	**Penalties for Violations**	6-8
6-5	**INTERPRETATION AND CONFLICT**	6-9

TABLE OF CONTENTS

ARTICLE 1	**ORDINANCE**	1-1
1:1	**PREAMBLE**	1-1
1:1.1	**Title**	1-1
1:1.2	**Authority**	1-1
1:1.3	**Purpose**	1-1
1:1.4	**Official Zoning Map**	1-2
1:1.5	**Board of Zoning Appeals**	1-2
1:1.6	**Supersedence and Repeal of Prior Ordinances**	1-2
1:1.7	**Interpretation and Conflict**	1-2
1:1.8	**Separability and Validity**	1-2
1:1.9	**Effective Date**	1-3
1:2	**FINDINGS**	1-3
ARTICLE 2	**DEFINITIONS**	2-1thru 2-27
ARTICLE 3	**ZONING REGULATIONS**	3-1
3:1	**PRIMARY ZONING DISTRICTS**	3-1
3:1.1	**Establishment of Zoning Districts, Purpose of Districts, and Rules for Interpretation of District Boundaries**	3-1
3:1.1-1	Establishment of Districts	3-1
Table 3-1	Table 3-1,Primary Zoning Districts	3-1
Table 3-2	Table 3-2,Special Purpose Districts	3-1
3:1.1-2	Purpose of Districts	3-1
3:1.1-3	Primary Districts	3-1
3:1.1-3A	Residential Districts	3-1
3:1.1-3B	Institutional and Commercial Districts	3-2
3:1.1-3C	Rural Resource Districts	3-3
3:1.1-3D	Special Purpose Districts	3-3
3:1.1-4	Establishment of Official Zoning Map(s)	3-4
3:1.1-5	Amendments to the Official Zoning Map(s)	3-4
3:1.1-6	Rules for Interpretation of District Boundaries on Official Zoning Map(s)	3-5
3:1.2	**Establishment of Tables**	3-5
3:1.3	**Use of Tables**	3-5
Table 3-3	Table 3-3, Schedule of Permitted and Conditional Uses and Off-Street Parking Requirements by Zoning District	3-7
Table 3-4	Table 3-4, Schedule of Lot Area, Yard, Setback, Height, Density, Floor Area, and Impervious Surface Requirements by District for Residential Uses	3-19
Table 3-5	Table 3-5, Schedule of Lot Area, Yard Setback, Height, Density, Floor Area, & Impervious Surface Requirements by District for Residential Uses - Conservation Design	3-20
Table 3-6	Table 3-6, Schedule of Lot Area, Yard Setback, Height, Density, Floor Area and Impervious Surface Requirements by District for Non-Residential Uses	3-21
3:2	**GENERAL ZONING PROVISIONS**	3-22
3:2.1	**Yards and Setbacks**	3-22
3:2.1-1	Determination of Front, Side, and Rear Yards and Setbacks	3-22
3:2.1-2	Setback Areas (Yards)	3-22
3:2.1-3	Yard and Setback Modifications	3-22
3:2.1-4	Example of Setbacks, Yards, and Buildable Area	3-23

3:2.1-5	Buildable Area	3-24
3:2.2	**Use of Land and Structures**	3-24
3:2.2-1	Conformity with Zoning District Regulations	3-24
3:2.2-2	Number of Permitted Dwellings per Lot	3-24
3:2.3	**Nonconformities**	3-25
3:2.3-1	Existing Nonconforming Lots of Record	3-25
3:2.3-2	Existing Nonconforming Uses, Buildings, and Structures	3-25
3:2.4	**Temporary Uses**	3-26
3:2.5	**Regulations for Accessory Structures and Uses**	3-28
3:2.5-1	Accessory Uses to Observe Required Setbacks	3-28
3:2.5-2	General Requirements	3-28
3:2.5-3	Location of Accessory Structures	3-29
3:2.5-4	Accessory Structures without Principle Building	3-30
3:2.6	**Exceptions to Height Limitations**	3-30
3:2.7	**Prohibited Lighting**	3-31
3:3	**CONDITIONAL USES**	3-31
3:3.1	**Accessory Apartments**	3-31
3:3.2	**Home Occupations**	3-31
3:3.3	**Bed and Breakfast Inns**	3-32
3:3.4	**Family Daycare Homes**	3-34
3:3.4-1	Definition	3-34
3:3.4-2	Regulations for Family Daycare Homes	3-34
3:3.5	**Camps and Recreational Vehicle Parks**	3-34
3:3.6	**Mobile Homes**	3-35
3:3.6-1	Replacement of Mobile Homes	3-35
3:3.7	**Park Model Homes**	3-35
3:3.8	**Manufactured Housing Parks**	3-36
3:3.9	**Mini-Warehouses**	3-37
3:3.10	**Open Storage Areas**	3-37
3:3.11	**Wrecking, Scrap, and Salvage Operations**	3-37
3:3.12	**Communication Towers and Antennas**	3-38
3:3.13	**Rural and B-3 Business Uses**	3-40
3:3.14	**Agricultural Facilities**	3-40
3:3.14-1	Agricultural Facility as Defined by SC Code of Law, Section 46-45-20	3-40
3:3.14-2	Conditional Uses for Swine Operations	3-41
3:3.15	**Vendors and Seasonal Roadside Stands**	3-42
3:3.15-1	Vendors	3-42
3:3.15-2	Seasonal Roadside Stands	3-42
3:3.16	**Patio and Zero Lot Line Housing**	3-43
3:3.17	**Townhouses**	3-44
3:3.18	**Manufacturing Facilities**	3-44
Table 3-7	Table 3-7, Maximum Continuous Sound Pressure Levels – Night Time	3-45
Table 3-8	Table 3-8, Maximum Sound Pressure Level Exceptions – Day Time	3-46
Table 3-9	Table 3-9, Maximum Intensity for Exterior Lights	3-47
3:3.19	**Construction and Demolition Landfills**	3-47
3:3.20	**Municipal Solid Waste Landfills**	3-48
3:3.21	**Sexually Oriented Businesses**	3-48
3:3.22	**Animal Spectator Events in Rural Zoning Districts**	3-50

3:3.22-1	Animal Spectator Events	3-50
3:3.23	**General Merchandise Auctions in Rural Zoning Districts**	3-51
3:3.24	**Motor Vehicle Towing Services in B-2 Zoning Districts**	3-52
3:3.25	**Agricultural Products Auctions in Rural Zoning Districts**	3-53
3:4	**SIGN REGULATIONS**	3-54
3:4.1	**Intent**	3-54
3:4.1-1	Applicability and Conformance	3-54
3:4.1-2	Definition	3-54
3:4.1-3	Permit or Registration Required	3-54
3:4.2	**Signs Requiring a Permit**	3-55
3:4.2-1	Freestanding Signs	3-55
3:4.2-2	Signs on Building Walls	3-56
3:4.2-3	Hanging Signs	3-56
3:4.2-4	Projecting Signs	3-57
3:4.2-5	Signs on Perimeter or Retaining Walls and Fences	3-57
3:4.2-6	Signs on Awnings, Canopies, and Marquees	3-58
3:4.2-7	Changeable Copy Signs	3-58
3:4.2-8	Message Board Signs for Institutional Use	3-59
3:4.2-9	Bed and Breakfast Inn Signs	3-60
3:4.2-10	Directional Signs for Religious Institutions	3-60
3:4.2-11	Home Occupation and In-Home Family Day Care Signs	3-60
3:4.2-12	Multiple Occupant Development Directory Signs	3-60
3:4.2-13	Outdoor Drive-Thru Menu Boards	3-61
3:4.2-14	Planned Development District (PDD) Signs	3-62
3:4.2-15	Residential Development Entrance Signs	3-62
3:4.2-16	Time and Temperature Signs	3-62
3:4.2-17	On-Site Business Signs Located Adjacent to an Interstate Highway Interchange	3-62
3:4.3	**Signs Not Requiring a Permit or Registration**	3-63
3:4.3-1	Regulations for Signs that Do Not Require a Permit or Registration	3-63
3:4.3-2	Signs that Do Not Require a Permit or Registration	3-63
Table 3-10	Table 3-10, Permanent Signs: Maximum Allowed Size and Number	3-65
3:4.4	**Temporary Signs**	3-65
3:4.4-1	Temporary Sign Regulations	3-65
3:4.4-2	Temporary Signs Requiring Registration	3-66
3:4.4-3	Temporary Signs Not Requiring Registration	3-69
3:4.5	**Prohibited Signs**	3-71
3:4.5-1	Prohibited Signs and Prohibited Sign Characteristics	3-71
3:4.6	**Signs Located in the Public Right-of-Way and on Public Property**	3-73
3:4.6-1	Regulations for Signs in the Public Right-of-Way and on Public Property	3-73
3:4.6-2	Signs Permitted in the Public Right-of-Way and on Public Property	3-73
3:4.7	**Sign Measurements**	3-74
3:4.7-1	Sign Height	3-74
3:4.7-2	Sign Clearances	3-74
3:4.7-3	Sign Frame Area	3-74
3:4.7-4	Sign Surface Area	3-75
3:4.7-5	Double-Sided Signs	3-75
3:4.7-6	Multiple Cabinet Signs	3-76
3:4.7-7	Round, Cube, and Other 3-D Signs	3-76

3:4.7-8	Individual Element Signs	3-76, 3-77
3:4.7-9	Signs on a Base Material	3-77
3:4.7-10	Signs on Awnings, Canopies, and Marquees	3-77
3:4.8	**Placement of Signs**	3-77
3:4.8-1	Placement	3-77
3:4.8-2	Signs in the Public Right-of-Way	3-77
3:4.8-3	Visibility at Intersections	3-77
3:4.8-4	Pedestrian Area Clearance	3-80
3:4.8-5	Use of Buffer Areas	3-80
3:4.9	**Illumination of Signs**	3-80
3:4.9-1	Illumination Regulations	3-80
Table 3-11	Table 3-11, Sign Illumination Standards	3-80 thru 81
3:4.10	**Sign Materials**	3-81
3:4.10-1	Code Compliance	3-81
3:4.11	**Existing Nonconforming Signs**	3-81
3:4.11-1	Regulations for Existing Nonconforming Signs	3-81
3:4.11-2	Off-Premise Advertising	3-82
3:4.12	**Maintenance and Upkeep of Signs**	3-82
3:4.12-1	Maintenance and Upkeep Regulations	3-82
3:4.13	**Removal of Signs**	3-83
3:4.13-1	Sign Removal Regulations	3-83
3:4.14	**Administration and Enforcement**	3-83
3:4.14-1	Permits and Registration	3-83
3:4.14-2	Application Requirements for a Sign Permit	3-84
3:4.14-3	Sign Permit Certification	3-84
3:4.14-4	Application Requirements for Sign Registration	3-84
3:4.14-5	Fees	3-84
3:4.14-6	Violations	3-85
3:4.14-7	Inspections	3-85
3:4.15	**Sign Definitions**	3-85
3:5	**BUFFERING, SCREENING, OPEN SPACE, AND LANDSCAPING REGULATIONS**	3-90
3:5.1	**Buffer Areas**	3-90
3:5.1-1	Applicability	3-90
3:5.1-2	Party Responsible for Installation	3-90
3:5.1-3	Zoning Change	3-90
3:5.1-4	Location	3-91
3:5.1-5	Design Standards	3-91
Table 3-12	Table 3-12, Buffer Width and Plant Material Requirements	3-92
3:5.1-6	Specifications	3-93
Table 3-13	Table 3-13, Perimeter Buffer Area Requirements: Proposed Non-Residential Uses	3-94
Table 3-14	Table 3-14, Perimeter Buffer Area Requirements: Proposed Residential Uses	3-94
Table 3-15	Table 3-15, Street Buffer Type Requirements: Proposed Residential and Non-Residential Uses	3-95
3:5.1-7	Substitutions and Variations	3-95
3:5.1-8	Required Maintenance	3-97

3:5.1-9	Use of Buffer Areas	3-97
3:5.1-10	Easements	3-97
3:5.1-11	Visibility at Intersections	3-97
3:5.2	**Screening**	3-100
3:5.2-1	Where Required	3-100
3:5.2-2	Type Screening Required	3-100
3:5.3	**Non-Residential Landscaping**	3-100
3:5.3-1	Where Required	3-100
3:5.3-2	Landscaping Plan	3-101
3:5.3-3	Cluster Developments	3-101
3:5.3-4	Interior Landscaping	3-101
3:5.3-5	Signage Landscaping	3-102
3:5.3-6	Required Maintenance	3-103
3:5.4	**Residential Common Open Space**	3-103
3:5.4-1	Where Required	3-103
Table 3-16	Table 3-16, Common Open Space: Amount Required	3-104
3:5.4-2	Applicability of Open Space Requirements	3-104
3:5.4-3	Common Open Space Plan	3-104
3:5.4-4	Types of Common Open Space and Required Maintenance	3-105
3:5.4-5	Preservation of Open Space	3-105
3:5.4-6	Residential Major Subdivision Reverse Frontage Lots	3-106
3:5.5	**Utilization of Buffers, Screening, and Open Space for Stormwater Management**	3-106
3:5.6	**Definitions**	3-106
3:6	**OFF-STREET PARKING REGULATIONS**	3-107
3:6.1	**Off-Street Parking**	3-107
3:6.1-1	General Requirements	3-107
3:6.1-2	Land to Provide Parking	3-108
3:6.2	**Design Standards**	3-108
Table 3-17	Table 3-17, Off-Street Parking: Minimum Aisle Widths	3-108
3:6.3	**Maintenance**	3-109
3:6.4	**Parking Spaces for the Physically Handicapped**	3-110
Table 3-18	Table 3-18, Required Number of Handicapped Spaces	3-110
3:6.5	**Off-Street Loading**	3-110
3:6.6	**Approval of Parking and Off-Street Loading Plans and Layouts**	3-110
3:6.7	**Parking, Storage, and Use of Recreational Vehicles and Boats**	3-111
3:6.7-1	In Commercial and Residential Zones	3-111
3:6.7-2	In Rural Zones	3-111
3:6.8	**Parking, Storage, and Use of Non-Recreational Vehicles and Equipment**	3-111
3:6.8-1	Inoperable Vehicles and Vehicles without Current License Plates	3-111
3:6.8-2	Vehicles on Blocks, Jacks, or any Suspension Other than Their Own	3-112
3:6.8-3	Vehicles Used for Commercial, Industrial, Farm, or Construction Purposes	3-112
3:6.8-4	Implements and/or Equipment Used for Commercial, Industrial, Agri-cultural, or Construction Purposes	3-112
3:7	**SPECIAL PURPOSE DISTRICT REGULATIONS**	3-112
3:7.1	**Airport Overlay District**	3-112
3:7.1-1	Types of Zones	3-112
3:7.1-2	Height Limitations	3-114

3:7.1-3	Use Regulations	3-114
3:7.1-4	Nonconforming Uses	3-114
3:7.2	**Historic Overlay Districts**	3-114
3:7.2-1	Type of District; Permitted Uses	3-114
3:7.2-2	Intent of Historic Overlay District	3-114
3:7.2-3	Establishment of a Historic Overlay District	3-115
3:7.2-4	Certificate of Appropriateness Required	3-115
3:7.2-5	Powers and Duties of the Planning and Zoning Commission	3-115
3:7.2-6	General Review Standards for Appropriateness	3-115
3:7.2-7	General Design Standards for Appropriateness	3-116
3:7.2-8	Certain Work Exempt from Commission Review	3-117
3:7.2-9	Development and Dimensional Standards	3-117
3:7.2-10	Unreasonable Hardship	3-117
3:7.2-11	Applications and Materials to be Submitted to the Commission	3-117
3:7.2-12	General Certification of Appropriateness	3-118
3:7.3	**Planned Development Districts (PDDs)**	3-118
3:7.3-1	Permitted Uses in Planned Development Districts	3-118
3:7.3-2	Establishment of Planned Development Districts	3-119
3:7.3-3	Minimum Area Required	3-119
3:7.3-4	Development Standards	3-119
A.	Density and Height Requirements	3-119
B.	Overall Site Design	3-119
C.	Parking and Loading	3-119
D.	Buffer Areas	3-119
E.	Streets and Street Improvements	3-119
F.	Landscaping and Common Open Space	3-120
G.	Signage	3-120
3:7.3-5	Site Plan Requirements	3-120
3:7.3-6	Action by Planning and Zoning Commission and County Council	3-120
3:7.3-7	Development of Approved Planned Development District	3-121
3:7.3-8	Changes in Approved Planned Development District Plans	3-121
A.	Minor Changes	3-121
B.	Major Changes	3-121
3:7.3-9	Expiration of Time Limits on Planned Development District Amendments	3-121
3:7.3-10	Vested Right	3-122
3:7.3-11	Revocation	3-122
3:7.3-12	Applicability of Other Regulations	3-122
3:7.3-13	Vested Right to Run with Property	3-122
3:7.4	**Lake Wateree Overlay District**	3-123
3:7.4-1	Authority	3-123
3:7.4-2	Establishment of Lake Wateree Overlay District	3-123
3:7.4-3	Compliance with Duke Energy Shoreline Management Plan	3-123
3:7.4-4	Group Development Guidelines for the Lake Wateree Overlay District	3-123
3:7.4-5	Resource Conservation	3-124
3:7.4-6	Lake Wateree Shoreline Buffer Regulations	3-124
A.	Applicability	3-124
B.	Undeveloped Parcels	3-124
1.	General Requirements	3-124

2.	Disturbance of Buffers	3-124
a.	General Exceptions	3-125
1.)	Tree Removal	3-125
2.)	Underbrush Removal	3-125
3.)	Pruning and Trimming	3-125
4.)	Emergency Operations	3-125
5.)	Eminent Domain	3-125
b.	Exceptions Requiring a Permit	3-125
1.)	View Corridors	3-125
2.)	Access Corridors	3-126
a.)	Tree Removal	3-126
b.)	Standards	3-126
3.)	Separation Between Corridors	3-126
4.)	Shoreline Bank Stabilization	3-126
5.)	Nonconforming Structures	3-126
6.)	Water-Dependent Structures	3-127
7.)	Exceptions for Public Recreational Facilities	3-127
a.)	Purpose	3-127
b.)	Modification of Buffer Boundaries	3-127
c.)	Location of Facilities	3-127
d.)	Access and View Corridors at Public Recreational Facilities	3-127
i.	Access Corridors	3-127
ii.	View Corridors	3-127
e.)	Stormwater Management	3-127
f.)	Review and Approval of Public Recreational Facility Master Plans	3-128
c.	Approval Procedures for Permitted Activity	3-128
d.	Restoration of Previously Disturbed Buffers	3-128
1.)	Applicability	3-128
2.)	Restoration Plan	3-129

Table 3-19	Table 3-19, Vegetation Densities for Restoration Buffers Disturbed Prior to Development	3-130
3.)	Minimum Mature Size	3-130
4.)	Maintenance of Restored Buffer	3-130
C.	Developed Parcels	3-130
1.	Nonconforming Structures	3-130
2.	Non-encroachment	3-130
3.	Water-Dependent Structures	3-131
4.	Enhancement of Buffers on Developed Single-Family Residential Parcels	3-131
a.	Expansion of Non-Conforming Principle Residential Structures within the Buffer Area	3-131
5.	Restoration of Buffers on Previously Developed Multi-Family or Non-Residential Parcels	3-131
a.	Applicability	3-131
b.	Restoration Plan	3-132
	Table 3-20, Vegetation Densities for Previously Developed Multi-Family	

Table 3-20	and Non-Residential Parcels	3-132
c.	Minimum Mature Size	3-133
d.	Maintenance of Restored Buffer	3-133
D.	Protection of Shoreline Buffers during Site Development and Construction Activity	3-133
E.	Shoreline Buffer Plat Requirements	3-133
3:7-4-7	Sediment and Erosion Controls for Residential Lot Development	3-134
A.	Residential Building Sediment and Erosion Control Certification	3-134
3:7-4-8	Lake Wateree Overlay District On-Site Sewage Disposal System Regulations	3-135
A.	Definitions	3-135
B.	Applicability	3-136
C.	New Installations	3-136
D.	Inspections of Existing Installations	3-136
1.	Inspections Prior to Sale of Real Estate Interest	3-136
a.	Minor Repairs or Alterations	3-137
b.	Failure Evaluation and Repairs	3-137
2.	Inspections Prior to Renovations	3-137
a.	Minor Repairs or Alterations	3-137
b.	Failure Evaluation and Repairs	3-137
3.	Inspections Prior to Change of Occupancy	3-138
a.	Minor Repairs or Alterations	3-138
b.	Failure Evaluation and Repairs	3-138
4.	Time Between Inspections	3-138
5.	Specialized (Engineered) Onsite Wastewater Systems	3-138
3:7-4-9	Compliance, Penalties, and Violations	3-139
ARTICLE 4	**BUILDINGS AND BUILDING REGULATIONS**	4-1
4:1	**GENERAL PROVISIONS**	4-1
4:1.1	**Definitions**	4-1
4:1.2	**Permit Required**	4-1
4:1.3	**Expiration of Building Permit**	4-1
4:1.4	**Compliance Required**	4-2
4:1.5	**Applicant**	4-2
4:1.6	**Building Permit Procedure**	4-2
4:2	**RESIDENTIAL BUILDINGS**	4-3
4:2.1	**Site-Built Housing**	4-3
4:2.2	**Modular Housing/Buildings**	4-3
4:2.3	**Manufactured Housing Installation, License, and Registration**	4-3
4:2.3-1	Applicant	4-3
4:2.3-2	Installer License	4-3
4:2.3-3	Process	4-3
4:2.3-4	Expiration of Permit	4-4
4:2.3-5	Set Up	4-4
4:2.3-6	Appearance Standards for Manufactured Housing in the GD and MRD-1 Zoning Districts	4-5
4:2.3-7	Habitability	4-5
4:2.3-8	Compliance Required	4-6
4:2.3-9	Registration and License	4-6

4:2.4	**Mobile Homes**	4-6
4:2.4-1	Replacement of Mobile Homes	4-7
4:2.5	**Existing Septic Tanks**	4-7
4:2.5-1	Definitions	4-7
4:2.5-2	Procedures for Existing Septic Tanks	4-7
4:2.5-3	Inspection Procedure	4-8
4:3	**GROUP DEVELOPMENTS**	4-8
4:3.1	**Applicant**	4-8
4:3.2	**Major Group Developments**	4-8
4:3.2-1	Definition of Major Group Development	4-8
A.	Commercial, Industrial, Institutional	4-9
B.	Housing	4-9
4:3.2-2	Procedure for Major Group Developments	4-9
4:3.3	**Minor Group Developments**	4-9
4:3.3-1	Definition of Minor Group Developments	4-9
4:3.3-2	Procedure for Minor Group Developments	4-9
4:4	**BUILDING PERMIT INSPECTIONS FOR COMPLIANCE**	4-10
4:4.1	**Compliance Inspection**	4-10
4:4.2	**Compliance Certification**	4-10
4:4.2-1	Certification Required	4-10
4:4.3	**Certificate of Occupancy**	4-10
4:4.4	**Compliance Certifications for Demolition, Moving, Sign, and Other Land Development Permits**	4-10
4:4.5	**Use Permits**	4-11
4:4.5-1	Use Permits for Multi-Occupancy Establishments	4-11
4:4.5-2	Single Occupancy Use Permits for Change of Occupancy, Change of Use, or Conditional Uses	4-11
4:5	**DEMOLITION PERMITS**	4-12
4:5.1	**Demolition Permit Applications for Structures other than Manufactured Housing**	4-12
4:5.1-1	Permit Certification	4-12
4:5.2	**Demolition Permit Application for Manufactured Housing**	4-12
4:5.2-1	Permit Certification	4-13
4:6	**MOVING PERMITS**	4-13
4:6.1	**Moving Permit Application for Structure other than Manufactured Housing**	4-13
4:6.1-1	Permit Certification	4-14
4:6.2	**Moving Permit Application for Manufactured Housing**	4-14
4:7	**FEES**	4-15
ARTICLE 5	**LAND DEVELOPMENT REGULATIONS**	
5:1	**REGULATIONS FOR THE SUBDIVISION OF LAND AND THE CREATION OF LOTS**	5-1
5:1.1	**Definition of Subdivision, SC Code of Law 6-29-1110**	5-1
5:1.1-1	Exceptions (under SC Code of Laws 6-29-1110)	5-1
5:1.1-2	Kershaw County Exemptions	5-1
5:1.2	**Lots**	5-2
5:1.2-1	Applicability	5-2
5:1.2-2	Definitions	5-2

5:1.2-3	Accessibility	5-3
5:1.2-4	Dimensions	5-3
5:1.2-5	Design	5-3
5:1.2-6	Flag Lots and Access Easements	5-3
5:1.2-7	Conditions for Allowing Flag Lots and Access Easements	5-3
5:1.2-8	Appeal to Planning and Zoning Commission	5-5
5:1.2-9	Subdivision of Lots, Parcels, and Tracts on Existing County Unimproved (Dirt) Roads	5-5
5:1.2-10	Residential Major Subdivision Reverse Frontage Lots	5-5
5:1.2-11	Alignment	5-5
5:1.2-12	Subdivision of Lots Requiring a Water Quality Buffer	5-5
5:1.3	**Areas Subject to Flooding**	5-6
5:1.3-1	General	5-6
5:1.3-2	Plat of Flood Hazard Areas	5-6
5:1.3-3	Prevention of Expansion of Flood Hazard Areas	5-6
5:1.4	**Water Supply**	5-6
5:1.4-1	SCDHEC Approval Required	5-6
5:1.4-2	When Required to Connect to Community Water Supply System	5-6
Table 5-1	Table 5-1, Community Water Supply System Connection Requirements	5-6
5:1.4-3	System Requirements	5-6
5:1.4-4	System Approval Required	5-7
5:1.4-5	System to Include Fire Hydrants	5-7
5:1.5	**Sanitary Sewer Facilities**	5-7
5:1.5-1	SCDHEC Approval Required	5-7
5:1.5-2	When Required to Connect to Community Sewerage System	5-7
Table 5-2	Table 5-2, Community Sewerage System Connection Requirements	5-7
5:1.5-3	System Requirements	5-7
5:1.5-4	System Approval Required	5-7
5:1.5-5	Kershaw County Requirements for Community Onsite Sewage Treatment and Disposal Systems	5-8
5:1.6	**Street Lighting**	5-8
5:1.7	**New Subdivision and Land Development Names**	5-8
5:1.8	**Utility Easements and Rights-of-Ways**	5-8
Table 5-3	Table 5-3, Drainage Easement Width Per Pipe Size and Depth	5-11
5:1.8-1	Maintenance of Easements and Rights-of-Way	5-11
5:1.9	**Surveys and Markings**	5-11
5:2	**LAND DEVELOPMENT SUBMITTAL REQUIREMENTS AND APPROVAL PROCESS**	5-24
5:2.1	**General Application Process**	5-24
5:2.1-1	Purpose	5-24
5:2.1-2	Application Process	5-24
A.	Pre-Application Conference and Sketch Plan Review	5-24
1.	Pre-Application Conference	5-24
2.	Sketch Plan Review	5-24
B.	Applications	5-24
C.	Review	5-24
Table 5-4	Table 5-4, Land Development Review and Approval Responsibilities	5-24
5:2.2	**Exempt Subdivisions**	5-25
5:2.2-1	State Law Exemptions (under SC Code of Law 6-29-1110)	5-25

5:2.2-2	Kershaw County Exemptions	5-25
5:2.2-3	Submittal Requirements	5-25
5:2.2-4	Approval Process	5-26
5:2.3	**Minor Subdivisions**	5-26
5:2.3-1	Definition of Minor Subdivision	5-26
5:2.3-2	Submittal Requirements	5-26
5:2.3-3	Approval Process	5-27
5:2.4	**Major Subdivisions**	5-27
5:2.4-1	Definition of Major Subdivision	5-27
5:2.4-2	Sketch Plan Review	5-27
A.	Submittal Requirements	5-27
B.	Sketch Plan	5-27
1.	Sketch Plan General Information	5-27
2.	Site Information	5-27
3.	Planned Improvements	5-28
4.	Phased Development	5-28
C.	Sketch Plan Approval Process	5-28
5:2.4-3	Preliminary Plans	5-29
A.	General Submittal Requirements	5-29
B.	Submittal and Distribution	5-29
C.	The Preliminary Plat	5-29
1.	General Information	5-30
2.	Site Information	5-30
3.	Planned Improvements	5-30
5:2.4-4	Construction Plans	5-31
5:2.4-5	Preliminary Plan Approval Procedure	5-32
5:2.4-6	Final Plat	5-33
A.	**Submittal Requirements**	5-33
B.	**Plat Information**	5-33
1.	General Information	5-33
2.	Site Information	5-34
3.	Surveyor Certification	5-34
4.	Certificate of Approval for Recording	5-34
5.	Certificate of Ownership and Dedication	5-35
6.	Certification for Private Roads and Facilities	5-35
7.	Sewer Easement Certification	5-35
5:2.4-7	Final Plat Approval Procedure	5-36
5:2.4-8	Appeal to Planning and Zoning Commission	5-37
5:2.5	**Large Acreage Single Family Residential Developments on Private Roads**	5-37
5:2.5-1	Large Acreage Single Family Residential Development Criteria	5-37
5:2.5-2	Preliminary Plans	5-38
A.	Submittal Requirements	5-38
1.	General Information	5-38
2.	Site Information	5-39
3.	Planned Improvements	5-39
5:2.5-3	Preliminary Plan Approval Procedure	5-39
5:2.5-4	Final Plat	5-40
A.	Submittal Requirements	5-40

B.	Plat Information	5-40
1.	General Requirements	5-40
2.	Site Information	5-40
3.	Surveyor Certification	5-41
4.	Certificate of Approval for Recording	5-41
5.	Certification for Private Roads and Facilities	5-41
6.	Sewer Easement Certification	5-42
5:2.5-5	Final Plat Approval Procedure	5-42
5:2.5-6	Appeal to Planning and Zoning Commission	5-43
5:2.6	**Group Developments**	5-43
5:2.6-1	Major and Minor Group Developments Defined	5-43
A.	Major Group Developments	5-43
1.	Commercial, Industrial, Institutional	5-43
2.	Housing	5-43
B.	Minor Group Developments	5-43
5:2.6-2	Minor Group Development Approval Process	5-44
5:2.6-3	Major Group Development Approval Process	5-44
A.	Submittal Requirements	5-44
1.	Zoning and Land Development Site Plan for Major Group Developments	5-45
2.	General Site Plan Information	5-45
3.	Landscaping	5-45
4.	Parking	5-45
5.	Signage	5-46
B.	Approval Process	5-46
1.	Planning and Zoning Commission Review	5-46
2.	Engineering Plans	5-46
3.	Approval	5-48
1.)	Certification of Ownership and Dedication	5-48
2.)	Sewer Easement Certification	5-48
5:2.7	**Development of Planned Development Districts**	5-49
5:2.7-1	Planned Development Site Plan	5-49
5:2.7-2	Preliminary Plan	5-50
A.	General Submittal Requirements	5-50
B.	Submittal and Distribution	5-50
C.	The Preliminary Plat	5-51
1.	General Information	5-50
2.	Site Information	5-51
3.	Planned Improvements	5-51
5:2.7-3	Construction Plans	5-52
5:2.7-4	Preliminary Plan Approval Procedure	5-53
5:2.7-5	Final Plat	5-54
A.	Submittal Requirements	5-54
B.	Plat Information	5-55
1.	General Information	5-55
2.	Site Information	5-55
3.	Surveyor Certification	5-55
4.	Certificate of Approval for Recording	5-55

5.	Certificate of Ownership and Dedication	5-56
6.	Certification for Roads and Facilities	5-56
7.	Sewer Easement Certification	5-56
5:2.7-6	Final Plat Approval Procedure	5-57
A.	Performance Financial Guarantee	5-57
5:2.8	**Traffic Management Plan**	5-58
5:2.8-1	Purpose	5-58
5:2.8-2	Determination of Need for Requiring a Traffic Management Plan	5-59
A.	Conference	5-59
1.	Calculation of LOS	5-59
2.	Alternative Method for Calculation of LOS	5-59
B.	Evaluation	5-59
5:2.8-3	Action by the Planning and Zoning Commission	5-59
5:2.8-4	Planning and Zoning Commission Approval of Traffic Management Plan	5-60
5:2.8-5	Coordination with South Carolina Department of Transportation	5-60
5:2.8-6	Transportation Management Plan Report	5-60
5:2.9	**Adequate Public Facilities**	5-61
5:2.9-1	Purpose	5-61
5:2.9-2	Applicability	5-62
5:2.9-3	Impact Assessments	5-62
5:2.9-4	Planning and Zoning Commission Consideration of Impact Assessments	5-62
5:2.10	**Environmental Impact Assessments**	5-63
5:2.11	**Development Agreements**	5-63
5:2.11-1	Minimum Requirements	5-63
Table 5-5	Table 5-5, Maximum Term of Development Agreement by Size of Project	5-63
5:2.11-2	Procedures for Adoption of Development Agreements	5-64
A.	Drafting of Agreement	5-64
B.	Planning and Zoning Commission Public Hearing	5-64
C.	Planning and Zoning Commission Recommendations to County Council	5-64
D.	County Council Public Hearing	5-64
E.	Development Agreement Ordinance	5-64
F.	Recording of Development Agreement	5-64
5:2.11-3	Annual Review	5-64
A.	Notice of Breach	5-65
B.	Corrective Action Plan	5-65
C.	Termination of Agreement	5-65
5:2.12	**Improvement Guarantees**	5-65
5:2.12-1	Planning Staff	5-65
5:2.12-2	Policy	5-65
5:2.12-3	Financial Guarantees	5-66
5:2.12-4	Option to Refuse Guarantee	5-66
5:2.12-5	Default of Guarantee	5-67
5:2.12-6	Allocation of Guarantee	5-67
5:2.12-7	Extension of Guarantee	5-67
5:2.12-8	Acceptable Format for Improvement Guarantee	5-67
5:2.12-9	Acceptable Format for an Improvement Guarantee Utilizing an Irrevocable Letter of Credit	5-68
5:2.12-10	Approval for Recording	5-69

5:2.12-11	Release of Improvement Guarantee	5-69
5:3	**LAND DEVELOPMENT DESIGN STANDARDS AND REQUIRED IMPROVEMENTS**	5-81
5:3.1	**Purpose**	5-81
5:3.2	**Site Design**	5-81
5:3.2-1	Site Design, Generally	5-81
5:3.2-2	Site Analysis	5-81
Table 5-6	Table 5-6, Site Analysis Key Components and Design Objectives	5-82
5:3.3	**Conservation Subdivision and Group Development Design**	5-83
5:3.3-1	Conservation Design	5-83
5:3.3-2	Purpose	5-83
5:3.3-3	Applicability	5-83
5:3.3-4	Process	5-84
5:3.3-5	Compliance	5-85
Table 3-5	Table 3-5, Scheduled Lot Area, Yard Setback, Height, Density, Floor Area, and Impervious Surface Requirements by District for Residential Uses - Conservation Design	5-86
5:3.4	**Tree Protection**	5-87
5:3.4-1	Findings and Intent	5-87
5:3.4-2	Tree Protection Definitions	5-87
5:3.4-3	Existing Significant Trees	5-87
5:3.4-4	Unlawful to Cut, Generally	5-87
5:3.4-5	Significant Tree Protection Zones	5-87
5:3.4-6	Exemption for the Removal of Existing Significant Trees	5-88
5:3.4-7	Significant Trees Removed without Permits	5-88
5:3.4-8	Tree Fund	5-89
5:3.4-9	Tree and Root Protection Prior to Development	5-89
5:3.4-10	Forestry Activity	5-90
5:3.5	**Phased Clearing**	5-90
5:3.5-1	Clearing Plan	5-90
5:3.5-2	Site Clearing Pre-Development Phase	5-91
5:3.5-3	Infrastructure Construction Phase	5-91
5:3.5-4	Building Phase	5-91
5:3.6	**Water Quality Buffers**	5-92
5:3.6-1	Basic Requirements for Water Quality Buffers	5-92
A.	Applicability	5-92
1.	Perennial Streams	5-92
a.	Exception: Perennial Streams on Individual Lots Under 3 Acres	5-92
2.	Intermittent Streams	5-92
a.	Exception: Intermittent Streams on Individual Lots Under 3 Acres	5-93
3.	Shoreline Buffers	5-93
a.	Exception: Shoreline Buffers on Individual Lots Under 3 Acres	5-93
4.	Floodways and Wetlands Associated with Perennial and Intermittent Streams	5-93
B.	Exception to Required Buffer Width	5-93
5:3.6-2	Disturbance of Buffers	5-94
A.	General Exceptions	5-94
1.	Tree Removal	5-94

2.	Underbrush Removal	5-94
3.	Pruning and Trimming	5-94
4.	Emergency Operations	5-94
B.	Exceptions to Requiring a Permit	5-94
1.	View Corridors	5-94
2.	Access Corridors	5-95
a.	Tree Removal	5-95
b.	Standards	5-95
3.	Separation Between Corridors	5-95
4.	Stream Bank Stabilization	5-95
5.	Stream Crossings and Utilities Easements	5-96
6.	Stream Relocation	5-96
7.	Exceptions for Public Recreational Facilities	5-97
a.	Purpose	5-97
1.)	Modification of Buffer Boundaries	5-97
2.)	Location of Facilities	5-97
3.)	Access and View Corridors at Public Recreational Facilities	5-97
4.)	Stormwater Management	5-97
5.)	Review and Approval of Public Recreational Facility Master Plans	5-98
C.	Approval Procedures for Permitted Activity	5-98
D.	Water Quality Buffer Plat Requirements	5-98
E.	Enhancement of Buffers	5-99
F.	Protection of Water Quality Buffers During Site Development and Construction Activity	5-99
5:3.7	**Stormwater Management Standards**	5-100
5:3.7-1	Definitions	5-100
5:3.7-2	General Storm Draining Design	5-101
5:3.7-3	Design Features	5-102
5:3.7-4	Design Storm Standards	5-102
5:3.7-5	Storm Drainage Calculations	5-103
Table 5-7	Table 5-7, Ranges of Rational Method Runoff Coefficients (“C”)	5-105
Table 5-8	Table 5-8, Rainfall Intensity for Kershaw County	5-105
5:3.7-6	System Capacity	5-105
5:3.7-7	Storm Drainage Pipes	5-106
5:3.7-8	Headwalls	5-107
5:3.7-9	Catch Basins, Drop Inlets, and Junction Boxes	5-107
5:3.7-10	Open Channels	5-109
5:3.7-11	Detention Ponds	5-109
5:3.7-12	Retention Ponds	5-110
5:3.7-13	Water Quality Ponds	5-111
5:3.7-14	Forebays	5-111
5:3.7-15	Subsurface Percolation Systems	5-111
5:3.7-16	Stagnant Water Conditions	5-111
5:3.7-17	Drainage Easements	5-112
Table 5-9	Table 5-9, Drainage Easement Width per Pipe Size and Depth	5-112
5:3.7-18	Hydric Soil Groups for Kershaw County	5-112
5:3.7-19	Erosion Prevention and Sediment Control Design	5-112
5:3.7-20	Maintenance	5-115

5:3.7-21	As-Built Engineering Plans	5-116
5:3.7-22	Standard Details	5-117
5:3.8	**Street Standards**	5-127
5:3.8-1	Definition of Street	5-127
5:3.8-2	Street Classifications	5-127
5:3.8-3	General Design Criteria	5-127
5:3.8-4	Right-of-Way	5-128
5:3.8-5	Required Street Improvements	5-128
5:3.8-6	Road Construction Standards	5-129
Table 5-10	Table 5-10, Road Design Thickness Requirements	5-129
Table 5-11	Table 5-11, Soils Unsuitable for Road Construction	5-130
5:3.8-7	Road Design Standards	5-133
Table 5-12	Table 5-12, Roadway Design Criteria	5-133
Table 5-13	Table 5-13, Width of Road by Curb Type	5-133
Table 5-14	Table 5-14, Horizontal Curve Radii	5-134
Table 5-15	Table 5-15, Vertical Curves	5-135
Table 5-16	Table 5-16, Superelevation	5-135
5:3.8-8	Intersection Design	5-137
Table 5-17	Table 5-17, Intersection Design	5-137
Table 5-18	Table 5-18, Additional Sight Measurements	5-140
5:3.8-9	Road Entrance Islands and Medians	5-140
5:3.8-10	Cul-de-Sac Islands	5-140
5:3.8-11	Shoulders	5-141
5:3.8-12	Street Signs	5-142
5:3.8-13	Street Names	5-142
5:3.8-14	Blocks	5-142
5:3.8-15	As-Built Engineering Plans	5-142
5:3.9	**Driveway Standards**	5-143
5:3.9-1	Definition of Driveway	5-143
5:3.9-2	Driveway Width	5-143
5:3.9-3	Number of Drives	5-143
5:3.9-4	Joint Use of Driveways/Connectivity	5-144
5:3.9-5	Driveway Separation	5-144
Table 5-19	Table 5-19, County Road Driveway Spacing Requirements	5-144
5:3.10	**Underground Wiring**	5-144
5:3.10-1	Where Required	5-144
5:3.10-2	Exceptions	5-145
5:3.11	**Gate Access Standards for Gated Communities**	5-145
5:3.12	**Utility Easements and Rights-of-Way**	5-146
Table 5-20	Table 5-20, Drainage Easement Width per Pipe Size and Depth	5-148
5:3.12-1	Maintenance of Easements and Rights-of-Way	5-149
5:3.13	**Surveys and Markings**	5-149
5:3.14	**Sidewalks and Paths**	5-149
ARTICLE 6	**ADMINISTRATION**	6-1
6-1	**ADMINISTRATION OF ORDINANCE**	6-1
6:1.1	**Planning Official**	6-1
6:1.2	**Board of Zoning Appeals**	6-1
6:1.2-1	Proceedings of the Board of Zoning Appeals	6-2

6:1.2-2	Appeals to the Board of Zoning Appeals; Hearings and Notices	6-2
6:1.2-3	Powers and Duties of the Board of Zoning Appeals	6-2
6:1.2-4	Decisions of the Board of Zoning Appeals	6-3
6:1.3	**Right to Appeal**	6-4
6:1.3-1	Appeal to the Board of Zoning Appeals	6-4
6:1.3-2	Appeal to Circuit Court and Pre-Litigation Mediation	6-4
6:1.3-3	Appeal to the Building Codes Board of Adjustments and Appeals	6-4
6:1.3-4	Appeal to the Planning and Zoning Commission	6-4
6:1.3-5	Appeal to County Council	6-4
6:1.3-6	Exceptions Granted by the Planning and Zoning Commission	6-4
6-2	**AMENDMENTS**	6-5
6-2.1	**Zoning Map Amendments**	6-5
6:2.1-1	Initiation of Map Amendment	6-5
6:2.1-2	Application Procedure	6-5
6:2.1-3	Review by the Planning and Zoning Commission	6-5
6:2.1-4	Report of the Planning and Zoning Commission	6-5
6:2.1-5	Notice of Public Hearing	6-6
6:2.1-6	Action by County Council	6-6
6:2.2	**Ordinance Text Amendments**	6-6
6:2.2-1	Referral to Planning and Zoning Commission	6-6
6:2.2-2	Public Hearing	6-6
6:2.2-3	Action by County Council	6-7
6:3	**ADMINISTRATIVE FEES**	6-7
6:3.1	**Continuance of Fees**	6-8
6:4	**VIOLATIONS AND PENALTIES**	6-8
6:4.1	**Processing of Violations**	6-8
6:4.2	**Penalties for Violations**	6-8
6-5	**INTERPRETATION AND CONFLICT**	6-9

LIST OF TABLES

Table 3-1	Primary Zoning Districts	3-1
Table 3-2	Special Purpose Districts	3-1
Table 3-3	Schedule of Permitted and Conditional Uses and Off-Street Parking Requirements by Zoning District	3-7
Table 3-4	Schedule of Lot Area, Yard, Setback, Height, Density, Floor Area, and Impervious Surface Requirements by District for Residential Uses	3-19
Table 3-5	Schedule of Lot Area, Yard Setback, Height, Density, Floor Area, and Impervious Surface Requirements by District for Residential Uses - Conservation Design	3-20
Table 3-6	Schedule of Lot Area, Yard Setback, Height, Density, Floor Area and Impervious Surface Requirements by District for Non-Residential Uses	3-21
Table 3-7	Maximum Continuous Sound Pressure Levels - Night Time	3-45
Table 3-8	Maximum Sound Pressure Level Exceptions - Day Time	3-46
Table 3-9	Maximum Intensity for Exterior Lights	3-47
Table 3-10	Permanent Signs: Maximum Allowed Size and Number	3-65
Table 3-11	Sign Illumination Standards	3-80, 3-81
Table 3-12	Buffer Width and Plant Material Requirements	3-92
Table 3-13	Perimeter Buffer Area Requirements: Proposed Non-Residential Uses	3-94
Table 3-14	Perimeter Buffer Area Requirements: Proposed Residential Uses	3-94
Table 3-15	Street Buffer Type Requirements: Proposed Residential and Non-Residential Uses	3-95
Table 3-16	Common Open Space: Amount Required	3-104
Table 3-17	Off-Street Parking: Minimum Aisle Widths	3-108
Table 3-18	Required Number of Handicapped Spaces	3-110
Table 3-19	Vegetation Densities for Restoration Buffers Disturbed Prior to Development	3-130
Table 3-20	Vegetation Densities for Previously Developed Multi-Family and Non-Residential Parcels	3-132
Table 5-1	Community Water Supply System Connection Requirements	5-6
Table 5-2	Community Sewerage System Connection Requirements	5-7
Table 5-3	Drainage Easement Width Per Pipe Size and Depth	5-11
Table 5-4	Land Development Review and Approval Responsibilities	5-24
Table 5-5	Maximum Term of Development Agreement by Size of Project	5-63
Table 5-6	Site Analysis Key Components and Design Objectives	5-82
Table 3-5	Scheduled Lot Area, Yard Setback, Height, Density, Floor Area, and Impervious Surface Requirements by District for Residential Uses - Conservation Design	5-86
Table 5-7	Ranges of Rational Method Runoff Coefficients (“C”)	5-105
Table 5-8	Rainfall Intensity for Kershaw County	5-105
Table 5-9	Drainage Easement Width per Pipe Size and Depth	5-112
Table 5-10	Road Design Thickness Requirements	5-129
Table 5-11	Soils Unsuitable for Road Construction	5-130
Table 5-12	Roadway Design Criteria	5-133
Table 5-13	Width of Road by Curb Type	5-133
Table 5-14	Horizontal Curve Radii	5-134

Table 5-15	Vertical Curves	5-135
Table 5-16	Superelevation	5-135
Table 5-17	Intersection Design	5-137
Table 5-18	Additional Sight Measurements	5-140
Table 5-19	County Road Driveway Spacing Requirements	5-144
Table 5-20	Drainage Easement Width per Pipe Size and Depth	5-148

LIST OF ILLUSTRATIONS/DRAWINGS

Setbacks, Yards, and Buildable Area	3-23
35% Rear Buildable Area	3-29
Sign Clearances	3-74
Sign Frame Area and Surface Area	3-75
Double-Sided Signs	3-75
Multiple Cabinet Sign	3-76
Individual Element Sign	3-76, 3-77
Visual Clearance Area	3-78, 3-98, 5-138
Intersection Sight Triangle for Road with 35 MPH Speed Limit	3-78, 3-98, 5-138
Driveway Sight Triangles for Streets with No Parking Spaces or Sidewalks	3-79, 3-99, 5-139
Driveway Sight Triangles for Streets with Parking Spaces	3-79, 3-99, 5-139
Driveway Sight Triangles for Streets with Sidewalks	3-79, 3-100, 5-139
Frame and Cover to be Used with Catch Basins and Curb Inlets	5-108
Frame and Cover to be Used with Junction Boxes	5-109
Modified Florida Type I Catch Basin - Top View	5-118
Modified Florida Type II Catch Basin - Top View	5-119
Modified Florida Type I and II Catch Basin - Front View	5-120
Modified Florida Type I and II Catch Basin - Side View	5-121
Type 9 Inlet Plan and Section View	5-122
Junction Box Plan and Section View	5-123
Rip-Rap Headwall (Grouted)	5-124
Straight Headwall (24” Diameter Pipe or Less)	5-125
Typical Headwall (Pipes Over 24” Diameter)	5-126
Underdrain	5-131
Dirt Road Section with Ditch - 50’ Right-of-Way	5-133
Barrier Curb Detail	5-134
Rolled Curb Detail	5-134
Cul-de-Sac Design Standards	5-141
Cul-de-Sac with an Island	5-141

ARTICLE 1 ORDINANCE #153.2010

Kershaw County, South Carolina Unified Code of ZONING AND LAND DEVELOPMENT REGULATIONS

AN ORDINANCE OF KERSHAW COUNTY, SOUTH CAROLINA, ENACTING A UNIFIED CODE OF ZONING AND LAND DEVELOPMENT REGULATIONS REGULATING THE LOCATION AND USE OF BUILDINGS, STRUCTURES, LAND, THE HEIGHT OF BUILDINGS AND OTHER STRUCTURES, THE SIZE OF YARDS, THE DENSITY AND DISTRIBUTION OF POPULATION; CREATING DISTRICTS FOR SAID PURPOSES AND ESTABLISHING THE BOUNDARIES THEREOF; ESTABLISHING LAND DEVELOPMENT AND DESIGN STANDARDS; REQUIRED IMPROVEMENTS; DEFINING CERTAIN TERMS USED HEREIN; PROVIDING FOR THE METHOD OF ADMINISTRATION AND AMENDMENT; AND PROVIDING FOR THE IMPOSITION OF PENALTIES FOR THE VIOLATION OF THE PROVISIONS OF THIS ORDINANCE.

1:1 PREAMBLE

1:1.1 Title

This Ordinance shall be known as the as the Kershaw County, South Carolina Unified Code of Zoning and Land Development Regulations. The short title shall be: Zoning and Land Development Regulations (ZLDR).

1:1.2 Authority

This Ordinance is adopted pursuant to the authority granted under the General Statutes of South Carolina, 1976 Code of Laws, Title 6, Chapter 29, *South Carolina Local Government Comprehensive Planning Enabling Act of 1994* (as amended).

1:1.3 Purpose

The purpose of this Ordinance is in keeping with the declaration of intent by the State of South Carolina (6-29-710 and 6-29-1120), to require harmonious, orderly, and progressive development of land in pursuit of public health, safety, economy, good order, appearance, convenience, morals, and the general welfare. In furtherance of this general intent, the regulation of zoning and land development is authorized for the following purposes among others:

A. To provide for adequate light, air, open space, and the prudent use of natural resources;
B. to prevent the overcrowding of land, to avoid undue concentration of population, and to lessen congestion in the streets;
C. to facilitate the creation of a convenient, attractive, and harmonious community;
D. to protect and preserve scenic, historic, or ecologically sensitive areas;
E. to facilitate the adequate provision or availability of community facilities and public services;

F. to secure safety from fire, flood, and other damages;
G. to encourage sound, sustainable, and stable development;
H. to assure the provision of required streets, utilities, and other facilities and services to new land development;
I. to assure the provision of safe, efficient, and convenient traffic access and circulation, both vehicular and pedestrian, in and through new land developments;
J. to assure the provision of public open space and building sites in new land developments through the dedication or reservation of land for recreation, education, transportation, and other public purposes; and
K. to assure, in general, the development of new areas in harmony with the Comprehensive Plan of Kershaw County.

1:1.4 Official Zoning Map

The Official Zoning Map established in Article 1, Section 1-3 of the Zoning Ordinance, Kershaw County, South Carolina as amended shall continue and remain in effect under this Ordinance.

1:1.5 Board of Zoning Appeals

The establishment of the Board of Zoning Appeals under Article 9, Section 9-9 of the Zoning Ordinance, Kershaw County, South Carolina as amended shall continue and remain in effect under this Ordinance.

1:1.6 Supersedence and Repeal of Prior Ordinances

Except as to Official Zoning Map (1:1.4) and Board of Zoning Appeals (1:1.5), as of the effective date of this Ordinance, these Zoning and Land Development Regulations supersede and repeal the Land Development Ordinance, Kershaw County, South Carolina as amended April 27, 2007; the Zoning Ordinance, Kershaw County, South Carolina as amended March 25, 2008; and the Kershaw County Engineering Standards adopted February 11, 2003.

1:1.7 Interpretation and Conflict

The provisions of this Ordinance shall be held to be minimum requirements. Where the conditions imposed by any provision of this Ordinance are either more restrictive or less restrictive than any other applicable statute, the more restrictive statute, imposing higher standards or requirements shall govern.

1:1.8 Separability and Validity

The provisions of this Ordinance are separable. Should any section or provision of this Ordinance be declared invalid or unconstitutional by any court of competent jurisdiction, such declaration shall not affect the validity of the Ordinance as a whole or any part thereof which is not specifically declared to be invalid or unconstitutional.

1:1.9 Effective Date

This Ordinance shall take effect three (3) months after the date of third reading, ratification, and adoption by Kershaw County Council.

1:2 FINDINGS

WHEREAS: It is the duty of the Kershaw County Planning and Zoning Commission to recommend regulations pertaining to Zoning and Land Development to the Kershaw County Council; and

WHEREAS: On November 10, 2009, the Kershaw County Planning and Zoning Commission recommended these Zoning and Land Development Regulations to the Kershaw County Council.

NOW, THEREFORE BE IT ORDAINED BY THE KERSHAW COUNTY COUNCIL that the Kershaw County, South Carolina Unified Code of Zoning and Land Development Regulations are hereby adopted.

DONE, RATIFIED, AND ADOPTED IN REGULAR MEETING OF KERSHAW COUNTY COUNCIL THIS 23rd DAY OF FEBRUARY, 2010
KERSHAW COUNTY, SOUTH CAROLINA

ATTEST:

Steve S. Kelly, Jr.
Chairman, Kershaw County Council

Merri M. Seigler
Clerk to Council

Sammie Tucker, Jr.
Vice Chairman, Kershaw County Council

First Reading	November 10, 2009
Public Hearing	January 12, 2010
Second Reading	February 9, 2010
Third Reading	February 23, 2010

ARTICLE 2 DEFINITIONS

Words not defined herein shall have the meanings stated in the International Building Code, International Plumbing and Mechanical Code, International Gas Code, or International Fire Prevention Code. Words not defined in the International Codes shall have the meanings in *Webster's New College Dictionary*, including revisions and later editions.

- Words in the present tense include the future tense. Words used in the singular include the plural, and words used in the plural include the singular.
- The words *must* and *shall* are always mandatory.
- The word *may* is permissive.
- The word *lot* includes the words *parcel, plot, property*, or *tract*.
- The word *person* includes a firm, association, organization, partnership, trust company, or corporation, as well as an individual.
- The word *used* or *occupied* as applied to any land or building shall be construed to imply that said land or building is in actual use or occupancy and shall be construed to include the words *intended, arranged*, or *designed to be used or occupied*. An intended project shall be defined as one where substantial monies have been spent towards the goal of the project.
- The term *zoning map* shall mean the Official Zoning Map for the affected jurisdiction.
- The term *Planning Commission* or *Planning and Zoning Commission* refers to the Planning and Zoning Commission for Kershaw County. The term *Board of Zoning Appeals* refers to the Board of Zoning Appeals for Kershaw County.

Access Easement - See *Easement, Access*.

Accessory Apartment - A second dwelling unit either within or added to an existing single-family detached dwelling, or in a separate accessory structure on the same lot as the main dwelling, for use as a complete, independent living facility with the provisions within the structure for cooking, eating, sanitation, and sleeping. Such a dwelling is an accessory use to the main dwelling.

Accessory Building - See *Building, Accessory.*

Accessory Structure - See *Building, Accessory.*

Accessory Use - A use incidental to a principal use.

Adjoining Lot - See *Lot, Adjoining.*

Agricultural Facility - Includes but is not limited to any land, building, structure, pond, impoundment, appurtenance, machinery, or equipment which is used for the commercial production or processing of crops, trees, livestock, animals, poultry, honeybees, honeybee products, livestock products, poultry products, or products which are used in commercial aquaculture.

Agriculture - The use of land for agricultural purposes, including farming, dairying, pasturage agriculture, horticulture, floriculture, viticulture, animal and poultry husbandry, and the necessary accessory uses for packing, treating, or storing the produce; provided, however, the operation of any such storing or packing process meets the requirements in this Ordinance.

Airport - Woodward Field.

Airport Hazard - Any structure, tree, or use of land which obstructs the airspace required for, or is otherwise hazardous to, the flight of aircraft in landing or taking off at the airport.

Alley - A private street primarily designed to serve as a secondary access to the side or rear of those properties whose principal frontage is on some other street.

Alteration - Any change, addition, or modification in construction or occupancy of an existing structure.

Alteration, Structural - Any change in the supporting members of a building, such as the bearing walls, beams, or girders, or any change in the dimension or configuration of the roof or exterior walls of a building.

Animal Shelter, Domestic - A pen, shelter, kennel, or structure where domestic animals are kept as pets and not for commercial purposes, adoption, rehabilitation, fostering, or for purposes of another party.

Animal Spectator Events - Events which include horse parks and equestrian event facilities, rodeos, bull riding, and other commercial animal riding events.

Apartment - See *Dwelling, Multi-Family.*

Apartment, Accessory - See *Accessory Apartment*.

Applicant - The person holding an application for a permit issued by the Planning and Zoning Department.

Arterial Street - See *Street, Arterial.*

Attached Structure - See *Structure, Attached.*

Available Public Water System - The public water system, company, or authority whose water lines bring water to the entrance of a subdivision.

Awning - An architectural projection or shelter projecting from and supported by the exterior wall of a building and composed of rigid or non-rigid materials and/or fabric on a supporting framework that may be either permanent or retractable. Example: A canvas covered frame extending from a building wall to an area over the sidewalk in front of a shop.

Base Flood Elevation - The crest elevation in relation to a mean sea level expected to be reached by the one (1) percent annual chance of flood, i.e., the 100 year flood.

Bed and Breakfast Inn - A house, or portion thereof, where breakfast and short-term lodging rooms are provided. The operator of the inn lives on or in adjacent premises.

Berm - Any man-made hill or slope which represents a change of elevation of at least twenty-five (25) percent (4:1 slope) and a maximum of thirty-three (33) percent (3:1 slope), and which is covered with an appropriate stabilizing vegetation.

Best Management Practices (Stormwater) - Schedules of activities, prohibitions of practices, maintenance procedures, other management practices, as well as structural controls to prevent or reduce the pollution of waters of the United States. Best management practices (BMPs) also include treatment requirements, operating procedures, and practices to prevent erosion, control runoff, spillage or leaks, sludge or waste disposal, or drainage from raw material storage.

Boarding House - An establishment providing lodging where meals are regularly prepared and served for compensation.

Buffer Area (Buffer Yard) - A unit of yard, together with plantings, fences, walls, and other screening devices required thereon. The purpose of a buffer area is to ameliorate any potential negative impact between adjacent land uses and streets, and to promote land use compatibility.

Buffer Yard - See *Buffer Area*.

Buffer, Riparian - The area of natural or planted vegetation adjacent to a natural watercourse.

Buildable Area - That portion of any lot which may be used or built upon in accordance with the regulations governing the zoning district within which the lot is located when the front, side, and rear yard, open space, and applicable buffer area requirements have been met.

Building - Any structure having a roof supported by columns or walls and intended for the shelter, housing, or enclosure of persons or property.

Building Height - See *Height, Building*.

Building Official - The chief building inspector who is designated a Certified Building Official by the International Code Council.

Building Permit - For purposes of this Ordinance, the term *building permit* shall be synonymous with Development and Improvement Permit, Electrical, Mechanical, Plumbing, Gas, Roofing, and Residential Specialty permits as used on departmental forms.

Building, Accessory - A detached subordinate structure occupied or devoted to a use incidental to the principal use. Included in this definition are private garages, storage sheds, workshops, domestic animal shelters, pool houses, etc., when detached from the principal building, and carports attached to the principal building when at least seven (7) percent is open or unenclosed.

Building, Modular Unit or Modular Structure - Any building of closed construction, regardless of type of construction or occupancy classification, other than a mobile or manufactured home, constructed off-site in accordance with the applicable codes, and transported to the point of use for installation or erection. When meeting the requirements of the *Modular Building's Construction Act* (23-43-10 of the S. C. Code of Laws), said building unit or structure may be located in any of the County's several zoning districts.

Building, Principal - A building in which is conducted, or in which is intended to be conducted, the main or principal use of the lot on which it is located.

Business - A person or entity known to the general public as providing goods or services to others outside the immediate family whether for profit or not.

Caliper - The diameter of a trunk of a nursery-grown tree or immature tree to be transplanted, measured at six (6) inches above the top of the root mass.

Camper - See *Recreational Vehicle*.

Canopy - An open-sided freestanding structure constructed of rigid materials or non-rigid materials, including, but not limited to metal, wood, concrete, plastic, canvas, or glass. The structure covering the fueling area at a gas station is considered to be a canopy. Other examples include picnic shelters, gazebos, and cabanas.

Certificate of Occupancy - A compliance certification issued upon a final inspection certifying that a structure has been constructed to all applicable codes and standards.

Child Care Services - Child care services mean and include any home, center, agency, or place, however styled, where children not related to the operator are received for custodial care, apart

from their parents, whether for compensation, reward, or otherwise during part or all of the day or night and upon any number of successive days or nights.

Civic Organization - A non-profit organization committed to community development.

Cluster Development - See *Development, Cluster.*

Code Enforcement Officer - The person(s) designated by Kershaw County Council to enforce County codes and regulations which include zoning and land development regulations.

Common Open Space - Land and/or water within or related to a development, not individually owned, which is designed and intended for the common use or enjoyment of the residents of the development or the public, which may contain such accessory structures and improvements as are necessary and appropriate for passive recreational purposes and utilities. Common open space may not be further subdivided.

Compliance Certification - A certification that any project completed under a Planning and Zoning Department building, land development, or use permit has been inspected and deemed completed under the permit conditions and the regulations of this Ordinance. A compliance certification must be issued before the occupation or use of any project. See definitions for *Certificate of Occupancy* and *Use Permit.*

Conditional Use - A use of land or structure, which is permitted in a zoning district under conditions specified in the zoning regulations of this Ordinance.

Confined Animal Feeding Operation (CAFO) - An agricultural facility where animals are confined and fed or maintained for a total of forty-five (45) days or more in a twelve (12) month period, and crops, vegetated forage growth, or post-harvest residues are not sustained in the normal growing season over any portion of the lot or facility. Structures used for the storage of animal waste from animals in the operation also are part of the concentrated feeding operation.

Conservation Design - A type of residential or commercial development where sixty (60) percent or more of the development land area is designated as undivided permanent open space; thereby permanently protecting agriculturally, environmentally, or ecologically significant areas within the parcel. The remaining developable land is subdivided into buildable lots or utilized as a group development; typically with more density than would be found in a traditional development within the zoning district

Corner Lot - See *Lot, Corner.*

County Building Codes - The most recent codes adopted by the South Carolina Building Code Council for use in the State of South Carolina and any additional codes that may be adopted by Kershaw County that have been approved by the South Carolina Building Code Council.

County Engineer - The County Engineer shall mean the County Engineer, Stormwater Manager, Public Works Director, or other County official designated by the County Administrator to perform specified engineering functions.

Density - The number of dwelling units per acre of land developed or used for residential purposes. Unless otherwise clearly stated, density requirements in this Ordinance are expressed in dwelling units per net acre; that is, per acre of land devoted to residential use and common open space exclusive of land utilized for streets, alleys, parks, playgrounds, school grounds, or other public uses.

Detached Structure - See *Structure, Detached.*

Detention Pond - *Pond, Detention*.

Developed (Land or Parcel) - A parcel that contains structures, facilities, or other modifications of the natural landscape on and below ground or water that are currently in use.

Developer - An individual, partnership, or corporation (or agent thereof) that undertakes the activities covered by these regulations.

Development - Any manmade change to improved or unimproved real estate, including but not limited to buildings or other structures, mining, dredging, filling, grading, paving, excavation, or drilling operations.

Development and Improvement Permit - See *Building Permit*.

Development, Cluster - A form of development that permits a reduction in lot area and/or bulk requirements, providing that the total project density is comparable to the density permitted under a conventional development.

Development, Group - A group development is a development of a single tract of land or adjacent tracts of land under the same ownership or control. Group developments include commercial, retail, industrial, institutional, multi-family residential, and manufactured home parks, and are classified as major or minor group developments as defined below:

A. **Major Group Developments** - Major group developments are as follows:
   1. Commercial, Industrial, Institutional - A group commercial, industrial, or institutional development consists of a multiple use or multiple occupant commercial, industrial, or institutional complex of a combined 25,000 square feet or greater of gross floor area, or a single-use, single-occupant commercial or industrial building of 25,000 square feet or greater of gross floor area. Examples are shopping centers and malls; commercial business or industrial parks; and "big box" retail.
   2. Housing - A group housing development consists of:
      a. Multi-family apartment buildings, duplexes, triplexes, quadruplexes, and townhouses on a single tract of land or adjacent tracts of land under the same ownership or control containing a combined total of more than ten (10) dwelling units.
      b. Manufactured Home Parks - All manufactured home parks are classified as major group developments.

B. **Minor Group Developments** - Minor group developments are as follows:
   1. Commercial, industrial, or institutional developments that consist of a multiple use or multiple occupant commercial, industrial, or institutional complex of a combined square footage of less than 25,000 square feet gross floor area, or a single-use, single-occupant commercial or industrial building of less than 25,000 square feet of gross floor area.
   2. Multi-family apartment buildings, duplexes, triplexes, quadruplexes, and townhouses on a single tract of land under the same ownership or control containing a combined total of more than two (2) and no more than ten (10) units.

Development, Land - The changing of land characteristics through redevelopment, construction, subdivision into parcels, condominium complexes, commercial parks, shopping centers, industrial parks, manufactured home parks, and similar developments for sale, lease, or any combination of owner and rental characteristics.

Development, Large Acreage Residential on Private Road - A development containing no lot less than ten (10) acres, developed on a private road, and meeting requirements of this Ordinance.

Development, Major Group - See *Development, Group*

Development, Minor Group - See *Development, Group*.

Development, Zero Lot Line - A development where the location of a building is on a lot in such a manner that one or more of the building's sides rests directly on a lot line.

Diameter at Breast Height (DBH) - The standard measure of tree diameter for trees existing in place on a site. The tree trunk is measured four and one-half (4½) feet above the ground. If the tree splits into multiple trunks below four and one-half (4½) feet, the trunk is measured at its most narrow point beneath the split.

District, Planned Development - See *Planned Development District.*

Double Frontage Lot - See *Lot, Double Frontage.*

Drainage Facility - Any component of the drainage system.

Drainage Systems - The system through which water flows from the land, including all water courses, water bodies, and wetlands.

Drainage - The removal of surface water or ground water from land by drains, grading, or other means.

Driveway - A paved or unpaved area used for ingress or egress of vehicles, and allowing access from a street to a building, lot, structure, or facility that provides access to no more than three (3) parcels of land. Access within multiple parcel group developments is excluded from this definition.

Driveway Sight Triangle - See *Sight Triangle.*

Duplex - See *Dwelling, Duplex.*

Dwelling – A dwelling shall be defined as a single unit providing complete independent living facilities designed, arranged, used, or intended for use by one or more persons living together and maintaining a common household, and which shall include permanent provisions for living, sleeping, eating, cooking, and sanitation (but excluding lodging units located in hotels or motels), including and limited to single-family, single-family detached, townhouse, triplex, zero lot line, duplex, multi-family, or patio dwellings.

Dwelling, Apartment - See *Dwelling, Multi-Family.*

Dwelling, Duplex - A single building designed, constructed, and used for two (2) dwelling units which are separated by common walls between the individual dwelling units.

Dwelling, Manufactured Home - A structure, transportable in one (1) or more sections which, in the traveling mode, is eight (8) body feet or more in width or forty (40) body feet or more in length or when erected onsite is 320 or more square feet and which is built on a permanent chassis and designed to be used as a dwelling with or without permanent foundation when connected to the required utilities, and includes the plumbing, heating, air conditioning, and electrical systems contained in it.

Dwelling, Mobile Home - A factory-built home built prior to enactment of the Federal *Manufactured Housing Construction and Safety Standards Act*, effective June 15, 1976.

Dwelling, Multi-Family - A building containing five (5) or more dwelling units.

Dwelling, Patio House - A single-family detached or semi-detached dwelling unit built on a

small lot generally enclosed by walls which provide privacy. For the purposes of this Ordinance, the term is synonymous with zero lot line dwelling.

Dwelling, Quadruplex - A single building designed, constructed or reconstructed, and used for four (4) dwelling units which are separated by common walls between the individual dwelling units.

Dwelling, Single-Family - A building containing one (1) dwelling unit.

Dwelling, Single-Family Detached- A detached dwelling of one unit, other than a manufactured home or a mobile home, designed for or occupied exclusively by one family.

Dwelling, Townhouse - A series of attached one-family dwelling units which may or may not have a common roof and are separated from each other by common vertical walls.

Dwelling, Triplex - A single building designed, constructed, and used for three (3) dwelling units which are separated by common walls between the individual dwelling units.

Dwelling Unit - A single unit providing complete, independent living facilities for one or more persons including permanent provisions for living, sleeping, eating, cooking, and sanitation.

Dwelling, Zero Lot Line - A zero lot line dwelling is a single-family detached unit which, instead of being centered on a lot, is placed against at least one of the side lot lines. For the purpose of this Ordinance, the term is synonymous with patio house.

Easement - A right-of-way granted, but not dedicated, for limited use of private land for a public or quasi-public purpose and within which the owner of the property shall not erect any permanent structures.

Easement, Access - An easement granted to allow access to a parcel of land.

Environmentally Sensitive Stream - See *Stream, Environmentally Sensitive*.

Evergreen Tree - See *Tree, Evergreen.*

Exempt Subdivision - See *Subdivision, Exempt.*

Façade - The exterior wall of a building that is exposed to public view or that wall viewed by persons not within the building.

Factory-Built Housing - A three dimensional, transportable, factory-built structure designed for long term residential use. Such housing includes manufactured, mobile, and modular homes.

Failed Septic System - Any sewage disposal system that does not adequately treat and dispose of sewage that consequently creates a public or private nuisance or threat to public health and/or environmental quality.

Fall Zone – The fall zone is the area on the ground equal to the height of a cell tower as measured from all points at ground level.

Family - One or more persons related by blood, marriage, adoption, or guardianship, and not more than four (4) persons not so related, except that up to nine (9) mentally or physically handicapped persons for whom care is provided on a twenty-four (24) hour basis shall be construed to be a family, in accord with the provisions of 6-29-770(E) of the South Carolina Code of Laws, including approval or licensing of the home in which they are located by a State agency for that purpose.

Family Daycare Home - A facility within a residence in which the operator (caregiver) resides,

where child daycare is regularly provided for no more than six children who are unattended by their parent or legal guardian, including those children living in the home and children who are related to the resident operator (caregiver). If child daycare is provided for only a child or children related to the resident caregiver and/or the child or children of only one unrelated family, then the facility is not a family daycare home.

Federal Manufactured Home Construction and Safety Standards - Regulations promulgated by the Department of Housing and Urban Development (HUD) governing the design and construction, strength and durability, transportability, fire resistance, energy efficiency, and quality of manufactured housing. These standards also set performance requirements for heating, plumbing, air conditioning, thermal, and electrical systems.

Fence - Any artificially constructed barrier of any material or combination of materials erected to enclose, define, or screen areas of land.

Fence, Paddock - A fence erected to enclose animals.

Final Plat - The final map of all or a portion of a development or subdivision which is presented for final approval for recording.

Fire Flow - Water flow not less than 500 gallons per minute with a residual pressure not less than twenty (20) psi.

Flag - A piece of flexible material or fabric, usually rectangular, of distinctive color and design, that is used as a symbol (to show national or other allegiance) or decoration.

Flag Lot - See *Lot, Flag.*

Flood Hazard Area - Areas subject to flooding as designated on the FEMA Flood Insurance Rate Maps of Kershaw County as an area of special hazard during a flood event.

Floodplain - See *Flood Hazard Area*.

Floor Area - See *Gross Floor Area*.

Floor Area Ratio - An intensity measure of land use derived by dividing the total floor area of a building by the total site area.

Forebay - A small pool or basin (typically about 10 percent of the volume of the main pond area) that is placed upstream of the main pond area and below the inlets into the pond. The forebay is separated from the main pond area by barriers or baffles that may be constructed of earth, stones, rip-rap, gabions, or geotextiles. A forebay is designed to trap coarse particles that would otherwise accumulate in the main pond area. By catching the coarse particles, routine maintenance is then typically performed on the much smaller forebay, thereby greatly reducing the need to dredge the main pond. Depending on the number and location of the inlets into the pond, either one larger or several smaller forebays may be required. Also referred to as a sediment forebay.

Forestry Activity - Forestry activity includes, but is not limited to, timber harvest, site preparation, controlled burning, tree planting, applications of fertilizers, herbicides, pesticides, weed control, animal damage control, fire control, insect and disease control, forest road construction, and any other generally accepted forestry practices.

Forest Management Plan - Forest management plan means a document or documents prepared or approved by a forester registered in this State that defines a landowner's forest management

objectives and describes specific measures to be taken to achieve those objectives. A management plan shall include silvicultural practices, objectives, and measures to achieve them, that relate to a stand or potential stand of trees that may be utilized for timber products, watershed or wildlife protection, recreational uses, or for other purposes.

Frontage - The length of the property line serving as a public street right-of-way line. For lots with multiple frontages, the principal street frontage shall be the same as that to which the building is oriented.

Frontage, Road/Street - Any strip of land adjacent to a public road right-of-way.

Garage, Private - An enclosed structure that is used for the parking or storage of private motor vehicles.

Gatehouse - A structure used at the entrance to a property for purposes of controlling or monitoring entry onto the property.

Good Operating Condition, Septic System - Good operating condition means an on-site sewage disposal system (OSDS) that, upon inspection, is determined to function in a sanitary manner; prohibits the discharge of untreated or partially treated wastewater onto the ground surface, into surface water, or into ground water; and allows building plumbing to discharge rapidly.

Gross Floor Area (GFA) - The sum of the floor area for each of a building's stories measured from the exterior limits of the faces of the structure, including basement floor area. It does not include unenclosed porches or any floor space in an accessory building or in the principal building which is designed for parking of motor vehicles.

Group Development - See *Development, Group*.

Gutter - A shallow channel usually set along a curb or the pavement edge of a road for purposes of catching and carrying off water.

Habitable - Refers to the condition of a structure which is safe and sanitary for human habitation. For habitability standards as applied to manufactured housing, refer to Article 4 of this Ordinance.

Height - The vertical measurement from average elevation of finished grade within twenty (20) feet of a structure or vegetation to the highest point of a structure or vegetation. This definition shall apply in determining height (by elevation) of all structures or vegetation within the Airport Overlay District.

Height, Building - For purposes of maximum building height per the zoning district regulations of this Ordinance, the measurement from average elevation of finished grade within twenty (20) feet of the structure to the bottom of the eave.

Home Occupation - Any occupation within the principle residence, clearly incidental thereto, carried on by a member or members of the family residing in the principal residence.

Homeowners' Association - A private non-profit association which is organized and legally chartered by a developer or members of a residential development whose functions include, but are not limited to, sharing common interests in open space and facilities; preserving, managing, and maintaining the common property; and enforcing certain covenants and restrictions.

Hotel - A facility offering transient lodging accommodations at a daily rate to the general public and may provide additional services such as restaurants, meeting rooms, and recreational facilities. The word *hotel* shall include the word *motel*.

Impervious Surface - Impervious surfaces are those that do not absorb water. All buildings, paved parking areas, driveways, roads, sidewalks, and any areas in concrete or asphalt shall be considered impervious surfaces within this definition unless constructed of specified pervious material. In addition, other areas determined by the Planning Official to be impervious within the meaning of this definition also will be classed as impervious surfaces.

Impervious Surface Ratio - The impervious surface ratio is a measure of the intensity of land use. It is determined by dividing the total area of all impervious surfaces within a site by the total site area.

Improvement - Any man-made immovable item which becomes part of, is placed upon, or is affixed to real estate.

Individual Sewerage Disposal System - A septic tank, seepage tile, sewerage disposal system, or any other approved sewerage treatment device serving a single unit.

Industrial Park - An industrial park is an area zoned and planned for the purpose of industrial development.

Institutional Use - Institutional uses include educational, religious, recreational, civic, municipal, and other non-commercial institutional uses that are allowable in any zoning district under the zoning district regulations of this Ordinance.

Instrument Runway - A runway equipped or to be equipped with a precision electronic navigation aid or landing aid or other air navigation facilities suitable to permit the landing of aircraft by an instrument approach under restricted visibility conditions.

Interior Lot - See *Lot, Interior.*

Intermittent Stream - See *Stream, Intermittent*.

Internally - Within the confines of a subdivision.

Intersection Sight Triangle - See *Sight Triangle.*

Junk or Salvage - Any materials consisting of waste discarded or salvage matter which is bought, sold, exchanged, stored, baled, packed, or disassembled for profit, trade, or hire; and shall include any vehicle damaged so as not to comply with State or Federal safety regulations, incapable of self-propulsion, or partially dismantled if retained on the premises for more than 72 hours whether for repair or not. The word *junk* shall also mean, but is not be limited to, old or scrap copper, brass, aluminum, rope, rags, paper, trash, tire carcasses, rubber debris, old vehicle parts, non-working major appliances, and other old ferrous or non-ferrous material.

Junk or Salvage Yard - Any premises where salvage or junk as defined herein are found and have been permitted to remain with the consent of the owner, lessee, or person(s) responsible for maintenance of such premises.

Kennel, Commercial (NAICS Code 81291) - A business establishment where small animals are boarded for compensation, or where dogs are raised and/or bred on a commercial scale. This definition does not include domestic animal shelters or veterinary clinics, where the boarding of animals is enclosed.

Land Development - See *Development, Land.*

Large Acreage Residential Development on Private Road - See *Development, Large Acreage Residential on Private Road.*

Large Maturing Tree - See *Tree, Large Maturing.*

Light Commercial and Industrial Street - See *Street, Light Commercial and Industrial.*

Light Emitting Diode (LED) - An electronic component that lets electricity pass in only one direction that emits visible light when electricity is applied, much like a light bulb. When many LEDs are side-by-side, they can create pictures and movement.

Lot - A parcel of land considered as a unit. The words *lot, property, plot, parcel*, or *tract* whenever used in this Ordinance, are interchangeable.

Lot Area - The area contained within the boundary line of a lot.

Lot Depth - The horizontal distance between front and rear lot lines.

Lot Line - A line bounding a lot which divides one lot from another, from a street, or any other public or private space.

Lot of Record - A lot that is recorded by plat or deed with the Kershaw County Register of Deeds.

Lot, Adjoining - All lots which the subject lot abuts or touches including lots solely separated from the subject lot by a public or private road, a public or private street, a public or private easement, right of way, or a stream.

Lot, Corner - A lot located at the intersection of two or more streets.

Lot, Double Frontage - A lot having frontage on two parallel or approximately parallel streets other than alleys.

Lot, Flag - A lot with a dedicated access to a public road provided to the bulk of the lot by means of a narrow corridor.

Lot, Interior - A lot, other than a corner lot, which has frontage on only one street other than an alley.

Lot, Minimum Width - The width of a lot as measured on the street frontage property line. Minimum lot widths do not apply to lots located on cul-de-sacs or on curves less than ninety (90) degrees.

Lot, Reverse Frontage - A double frontage lot extending between, and having frontage on an arterial street and a minor street, and with vehicular access solely from the minor street.

Low Impact Development (LID) - A stormwater management and land development strategy applied at the parcel and subdivision scale that emphasizes conservation and use of on-site natural features integrated with engineered, small-scale hydrologic controls to more closely mimic pre-development hydrology. LID focuses on how water enters a site, is stored on-site, is used on-site, and leaves a site. Land development that incorporates LID practices minimizes impervious surface, protects and enhances native vegetation and soils, and manages stormwater at its source. The goal of LID is to prevent measurable harm to streams, lakes, wetlands, and other natural aquatic systems from commercial, residential, or industrial development sites, while also promoting beneficial use (or reuse) of naturally occurring water on the development sites.

Major Group Development - See *Development, Group.*

Major Subdivision - See *Subdivision, Major.*

Mansard Roof - A type of roof construction in which all four sides of the roof have two slopes. The lower slope is typically steeper than the upper slope.

Manufactured Home - See *Dwelling, Manufactured Home.*

Manufactured Housing - See *Dwelling, Manufactured Home.*

Mapping Official - Refers to the Kershaw County Geographical Information System (GIS) Coordinator or his designee.

Marquee - A fixed hood or awning of permanent construction which is supported solely from a building wall, and extends beyond the building. Example: The structure over the front sidewalk area at a movie theatre.

Medium Maturing Tree - See *Tree, Medium Maturing.*

Mini-Warehouse - A building or group of buildings in a controlled-access and fenced compound that contains individual, compartmentalized, and controlled-access stalls or lockers for the dead storage of a customer's goods or wares.

Minor Group Development - See *Development, Group.*

Minor Subdivision - See *Subdivision, Minor.*

Mobile Home - See *Dwelling, Mobile Home.*

Mobile or Manufactured Home Park - A lot or parcel with space, improvements, and utilities for the long-term parking of two (2) or more mobile or manufactured homes which may include services and facilities for the residents.

Mobile or Manufactured Home Park Space - A plot of ground within a mobile or manufactured home park designed for the accommodation of one mobile or manufactured housing unit. The space does not constitute a lot of record.

Modular Building - See *Building, Modular Unit or Modular Structure*.

Multi-Family Dwelling - See *Dwelling, Multi-Family.*

Municipal Separate Storm Sewer System (MS4) - Conveyance or system of conveyances (including roads with drainage systems, municipal streets, catch basins, curbs, gutters, ditches, man-made channels, or storm drains) owned or operated by a State, city, town, borough, county, parish, district, association, or other public body and designed or used for collecting or conveying stormwater, which is not a combined sewer and is not part of a Publicly Owned Treatment Works (POTW). The term *MS4* typically refers to that public body whose conveyance system is further regulated by the National Pollution Discharge Elimination System (NPDES) as defined in the *Clean Water Act* and associated State NPDES General Permits for Storm Water Discharges.

Native and Adapted Plants - Native plants are plants that were growing in this region prior to European settlement. Adapted plants are plants that have been introduced to the region that grow reliably well. Native and adapted plants require minimal attention from humans in the form of winter protection, pest treatment, water irrigation, or fertilization once the root systems are

established in the soil. Native and adapted plants are considered to be low maintenance and not invasive.

New Slaughterhouse Operations - For purposes of this Ordinance, new slaughterhouse operations means agricultural operations that are established after this Ordinance's effective date; and slaughter or process more than two hundred million pounds of livestock, hogs, aquatic animals, equine, chickens, turkeys, poultry, or other fowl normally raised for food, mules, cattle, sheep, goats, rabbits, or similar farm animals for commercial purposes. A new slaughterhouse operation does not include a slaughterhouse located within the corporate limits of a city that relocates within that same county.

New Swine Operations - For purposes of this Ordinance, new swine operations means porcine production operations not in existence on June 30, 2006.

Nonconforming Structure - See *Nonconformity.*

Nonconforming Use - See *Nonconformity.*

Nonconformity - A nonconformity is any lot of record, use, building, structure, or vegetation in existence prior to the effective date of this Ordinance, but which fails, by reason of such adoption, revision, or amendment to conform to the present requirements of this Ordinance.

Non-Residential Use - A principal use of land for purposes other than residential, i.e. commercial, industrial, or institutional.

Off-Premise Directional Sign - See *Sign, Off-Premise Directional*.

Official Zoning Map - The map(s), maintained in the Planning and Zoning Department, indicating the boundaries of the zoning districts of the unincorporated areas of Kershaw County. The Official Zoning Map and all amendments, certifications, citations, and other matters entered onto the Map are a part of this Ordinance and have the same legal effect as if fully set out herein.

On-Site Sewage Disposal System (OSDS) - Any system, piping, tanks, drain fields, alternate toilets, or other facilities designed to function as a unit to convey, store, treat, and/or dispose of sanitary sewage by means other than discharge into a public sewer. For purposes of this Ordinance an OSDS shall mean any septic tank or other on-site sewage disposal system.

Open Space Ratio - A measure of the intensity of land use arrived at by dividing the total amount of open space within the site by the total site area.

Overlay District - An area established by this Ordinance in which the underlying zoning district regulations are supplemented by regulations created specifically for the referenced area.

Owner-Occupied - A dwelling occupied for residential use by the owner(s) of record.

Paddock - A small field or enclosure for animals.

Paddock Fence - See *Fence, Paddock.*

Parapet - A vertical false front or wall extension that rises above the roofline of a building.

Parcel - A land area bounded by property lines that is recognized as such by the County Assessor's Office. Also referred to as *lot, plot*, or *tract*.

Park - A public facility open for recreation, open space, and public gardens or private facilities with commercial activities for recreational uses only.

Park Model Home - A recreational vehicle primarily designed and intended to provide

temporary living quarters for recreational, camping, or seasonal use. It is built on a single chassis, mounted on wheels with a gross trailer area not exceeding 400 square feet in the setup mode. Each park model shall be certified by its manufacturer as complying with ANSI A119.5. Also referred to as a park model trailer, park model cabin, or park model camper.

Patio House - See *Dwelling, Patio House.*

Pennant - A triangular shaped flag.

Perennial Plant - A plant which lives or continues to live more than two years, whether it retains its leaves in winter or not.

Perennial Stream - *See Stream, Perennial.*

Person - The word *person* includes an individual or a firm, association, partnership, trust, company, corporation, or any other entity defined in legal usage as a person.

Planned Development District - A zoning district that designates an area for which an approved development plan constitutes the district regulations. It is intended to utilize the factors of efficiency, economy, flexibility, creative site design, improved appearance, compatibility of mixed uses, maximum benefits from open space and green space, safe and efficient vehicular and pedestrian access for a development characterized by a unified site design for mixed uses. A planned development district may be predominately residential, commercial, industrial, or any combination thereof.

Planning Official - The Planning and Zoning Director or the designated Building Official or other Planning and Zoning Department official designated by the Planning and Zoning Director to administer the provisions of this Ordinance.

Plants, Native and Adapted - See *Native and Adapted Plants.*

Plat - A map or drawing upon which the developer's plan of a subdivision or land development is presented for approval.

Plat, Final - See *Final Plat.*

Plot - See *Lot*.

Pond, Detention - A detention pond provides temporary storage of storm water (e.g., 24 hours) to allow particles and associated pollutants to settle and has an outlet structure that allows the stormwater runoff to be discharged at or below the predevelopment runoff rate. Detention ponds do not have a permanent pool and are designed to drain completely dry after some minimum time (e.g., 72 hours). If the 24-hour, 100-year volume is exceeded either due to larger or consecutive storm events, the pond is designed to release the excess water via an emergency spillway. Also referred to as a dry pond, dry detention pond, extended detention pond, or extended detention basin.

Pond, Retention - A retention pond is a detention pond or shallow basin that is designed to impound stormwater runoff from up to a 24-hour, 100-year storm event and infiltrate the stormwater into the soil. Retention ponds do not have a permanent pool and are designed to drain completely dry after some minimum time (e.g., 72 hours). If the 24-hour, 100-year volume is exceeded either due to larger storm events, consecutive storm events, or changes in infiltration rates, the pond is designed to release the excess water via an emergency spillway. Also referred to as an infiltration basin or retention basin.

Pond, Wet - Wet ponds are detention ponds that are constructed to have a permanent pool of water throughout the year. Wet ponds treat incoming stormwater runoff by allowing particles and associated pollutants to settle, while biological activity takes up nutrients. During any given storm event, stormwater runoff enters the pond and replaces the "treated" water in the permanent pool that has been detained from the previous storm event. Like a dry detention pond, a wet pond also provides temporary storage of storm water runoff from up to a 24-hour, 100-year storm event and has an outlet structure that allows the stormwater runoff to be discharged at or below the predevelopment runoff rate. In addition, if the 24-hour, 100-year volume is exceeded either due to larger or consecutive storm events, the pond is designed to release the excess water via an emergency spillway. Also referred to as a permanent pool detention pond, stormwater pond, wet detention pond, or wet extended detention pond.

Premises - Lots, plots, or parcels of land including the buildings or structures thereon, under control by the same owner or operator.

Principal Building - See *Building, Principal*.

Principal Use - The primary purpose for which land or a structure is used.

Private Road - *See Road, Private.*

Private Street - See *Street, Private*.

Project Boundary, Lake Wateree - The project boundary is contour elevation 225.5 feet above mean sea level (MSL) around Lake Wateree plus metes and bounds surveys at Duke Energy-owned recreation areas and the dam and powerhouse structures.

Quadruplex - See *Dwelling, Quadruplex.*

Recreational Vehicle - A vehicular type portable structure without permanent foundation, which can be towed, hauled, or driven and primarily designed as temporary living accommodations for recreational, camping, and travel use and including, but not limited to, travel trailers, truck campers, camping trailers, park model homes, and self-propelled motor homes.

Required Front Yard - See *Yard, Required Front.*

Required Rear Yard - See *Yard, Required Rear.*

Required Side Yard - See *Yard, Required Side.*

Required Yard - See *Yard, Required.*

Residential Collector Street - See *Street, Residential Collector.*

Residential Local Street - See *Street, Residential Local.*

Retention Pond - See *Pond, Retention*.

Reverse Frontage Lot - See *Lot, Reverse Frontage.*

Right-of-Way - An area or strip of land, either public or private, on which an irrevocable right of passage has been recorded to be occupied, or intended to be occupied, by a street, crosswalk, railroad, road, electric transmission line, gas pipeline, water main, sanitary or storm sewer main, shade trees, or for another special use.

Riparian Buffer - *See Buffer, Riparian.*

Road - See *Street*.

Road, Private - A road that is neither owned nor maintained by Kershaw County, the State of South Carolina, or the Federal government.

Road, Unimproved - A road maintained by Kershaw County that does not meet the minimum Kershaw County road standards.

Rooming House - See *Boarding House.*

Runway - The paved surface of an airport landing strip.

Screening - A type of buffer that is to block or obscure a particular element or use from view. The purpose of screening is to minimize, if not eliminate entirely, the visual impact of potentially unsightly open storage areas and refuse disposal facilities.

Seasonal Roadside Stand - Any trailer, tent, non-operable motor vehicle, or other facility or structure, not erected on a foundation that is erected and operated for the sale or solicitation of seasonal sale of agricultural products, fireworks, or other products not customarily sold on a year-round basis.

Septic Tank Inspector - Any person licensed by SCDHEC to install, repair, service, monitor, or inspect an on-site sewage disposal system.

Septic System - Good Operating Condition - See *Good Operating Condition, Septic System*.

Setback Area - The area within the minimum horizontal distance between the building line and related front, side, or rear property line. Also refer to *Yard, Required.*

Sexually Oriented Business - For purposes the term Ordinance, *sexually oriented business operations* shall mean and include the following:

A. **Adult Arcade** means any place to which the public is permitted or invited wherein coin-operated or slug-operated or electronically, electrically, or mechanically controlled still or motion picture machines, projectors, or other image-producing devices are maintained to show images to five (5) or fewer persons per machine at any one time, and where the images so displayed are distinguished or characterized by the depicting or describing of "specified sexual activities" or "specified anatomical areas."

B. **Adult Bookstore or Adult Video Store** means a commercial establishment, which, as one of its principal business purposes, offers for sale or rental for any form of consideration any one or more of the following:
   1. Books, magazines, periodicals, or other printed matter, or photographs, films, motion pictures, video cassettes, digital video discs, or video reproductions, slides or other visual representations which depict or describe "specified sexual activities" or "specified anatomical areas," or;
   2. instruments, devices, or paraphernalia, which are designed for use in connection with "specified sexual activities." A commercial establishment may have other principal business purposes that do not involve the offering for sale or rental of material depicting or describing "specified sexual activities" or "specified anatomical areas" and still be categorized as an adult bookstore or adult video store. Such other business purposes will not serve to exempt such commercial establishment from being categorized as an adult bookstore or adult video store so long as: One (1) of its principal business purposes is the offering for sale or rental for consideration the specified materials which depict or describe "specified sexual activities" or "specified anatomical areas."

C. **Adult Cabaret** means a nightclub, bar, restaurant, or similar commercial establishment which regularly features:
   1. Persons who appear in a state of nudity; or
   2. live performances which are characterized by the exposure of "specified anatomical areas" or by "specified sexual activities," or
   3. films, motion pictures, videocassettes, digital video discs, slides, or other photographic reproductions, which are characterized by the description of "specified sexual activities" or "specified anatomical areas."

D. **Adult Motel** means a hotel, motel, or similar commercial establishment which:
   1. Offers accommodations to the public for any form of consideration; provides patrons with closed-circuit television transmissions, films, motion pictures, video cassettes, digital video discs, slides, or other photographic reproductions which are characterized by the depiction or description of "specified sexual activities" or "specified anatomical areas," and has a sign visible from the public right-of-way which advertises the availability of this adult-type of photographic reproductions; or
   2. offers a sleeping room for rent for a period of time that is less than ten (10) hours; or
   3. allows a tenant or occupant of a sleeping room to sub-rent the room for a period of time that is less than ten (10) hours.

E. **Adult Motion Picture Theater** means a commercial establishment where, for any form of consideration, films, motion pictures, video cassettes, digital video discs, slides, or similar photographic reproductions are regularly shown which are characterized by the depiction or description of "specified sexual activities" or "specified anatomical areas."

F. **Adult Theater** means a theater, concert hall, auditorium, or similar commercial establishment which regularly features persons who appear in a state of nudity or live performances which are characterized by the exposure of "specified anatomical areas" or by "specified sexual activities."

G. **Sexual Encounter Center** means a business or commercial enterprise that, as one of its primary business purposes, offers for any form of consideration:
   1. Physical contact in the form of wrestling or tumbling between persons of the opposite sex; or
   2. activities between male and female persons and/or persons of the same sex when one or more of the persons is in a state of nudity or semi-nudity.

Shrub - Any hard-wooded perennial plant of a species which normally reaches a height between twelve (12) inches and eight (8) feet, which is between eighty (80) and 100 percent opaque at maturity.

Sight Triangle - Measured from the curb or edge of pavement, a sight triangle is a triangular area created by a line connecting points on the front and side for lines at a determined distance from the intersection of said lines or the extension of said lines. The following two types of sight triangles are used in this Ordinance:

A. **Driveway Sight Triangle** - The driveway sight triangle is one that is measured ten (10) feet along the driveway and ten (10) feet along the edge of pavement. In the event that parking is allowed adjacent to the curb, ten (10) feet will be measured along the edge of the driveway and ten (10) feet along the edge of the lane of traffic. In the event that a driveway crosses a sidewalk, ten (10) feet will be measured along the driveway and ten (10) feet along the edge of the sidewalk. Refer to illustrations in the sign measurement or street standards provisions of this Ordinance.

B. **Intersection Sight Triangle** - A triangle established by multiplying the speed limit of the road which is being accessed by ten (10). The sight distance for a speed limit of 35 MPH would be 350 feet at the intersection. The resulting intersection sight distance triangle is determined by measuring from a point fifteen (15) feet from the edge of pavement of the road being accessed to the points providing the minimum intersection sight distance in each direction.

Sign - Any structure or device designated or intended to convey information to the public in written, pictorial, or symbolic form.

Sign Copy - All words, letters, numbers, figures, characters, art work, symbols, or insignia that are used on a sign surface area.

Sign Frame Area - The sign frame area consists of the dimensions of a geometric shape formed by all supports, frames, braces, borders, and embellishments which extend beyond the sign surface area and that encloses the sign surface area and does not contain any copy, logo, advertising, name, or message.

Sign Height - The distance measured from the natural grade to the highest point of the sign face or structure, whichever is higher.

Sign Owner - The person receiving benefit from the sign and/or the property owner.

Sign Structure - Any base, foundation, pedestal, pole, post, upright, brace, bracket, bar, rod, strut, dross-piece, frame, scaffold, girder, or other similar item with or without a sign thereon, designated to support the load and/or force of a sign's surface area, regardless of whether or not such items are permanently attached to the ground.

Sign Surface Area - The area inside a geometric shape enclosing any message, logo, symbol, name, photograph, or display face. All area dimensional provisions in this Ordinance are calculated from the sign surface area dimensions.

Sign, Abandoned - A sign, which relays information that is no longer pertinent or up-to-date; no longer advertises a bona fide business, lessor, owner, product, activity conducted, or product available; is located on a structure that does not contain a sign surface area; contains a sign with no message; or is located on a site which no longer has any business activity.

Sign, Animated - Any sign, or any part of a sign, that changes copy or image more frequently than once every fifteen (15) seconds is considered to be animated. Included are signs that employ motion or the illusion of motion by any means (manual, electronic, mechanical, electrical, atmospheric, panels, slats, discs, or lights, etc.) to depict action or create a special effect or scene. Also included are signs that create illusions by blinking, alternating, chasing, contracting or expanding, flashing, fading, repeating, oscillating, pulsating, rotating, rolling, running, scrolling, strobing, twinkling, or simulating moving video images, etc.

Sign, Awning - A sign displayed on or attached flat against the surface or surfaces of an awning.

Sign, Banner - A sign intended to be hung either with or without a frame, possessing characters, letters, illustrations, or ornamentation applied to flexible materials or fabric of any kind, excluding flags and emblems of corporations or political, professional, religious, or educational organizations.

Sign, Billboard - See *Sign, Off-Premise Advertising*.

Sign, Building Wall - Any sign attached to a wall, painted on the wall surface, or erected and

confined within the limits of an exterior wall of any building or structure, which is supported by such wall or building, and which displays only one sign surface.

Sign, Campaign - A temporary sign erected by a political candidate, group, or agent thereof, for the purpose of advertising a candidate or stating a position regarding an issue upon which the voters of the County shall vote. Also called an election sign or political sign.

Sign, Canopy - A sign displayed on, or attached flat against, the surface or surfaces of a canopy.

Sign, Changeable Copy - A sign or portions thereof with characters, letters, or illustrations that can be changed or rearranged by any means (manual, electronic, atmospheric, mechanical, remote, etc.) without altering the face or surface of the sign.

Sign, Common - A single sign frame or structure containing individual signs or logos to advertise more than one individual business, service, product, etc.

Sign, Contractors', Craftsmen's, or Construction - A common sign temporarily erected and maintained on a job site while undergoing construction by a contractor, craftsman, architect, developer, finance organization, subcontractor, or similar concern.

Sign, Dilapidated - Any sign which is not properly maintained; is insecure, or otherwise structurally unsound; has defective parts in the support, guys and/or anchors; or is unable to withstand wind pressure of 100 miles per hour as determined by the Building Official and applicable regulations as provided in the applicable building codes.

Sign, Double-Sided - Two signs with parallel faces twelve (12) inches apart or less, or with faces joining at an angle of ten (10) degrees or less. For signs so arranged, only one side of the sign is to be used for computation of the sign surface area.

Sign, Drive-Thru Menu Board - A freestanding sign oriented to the drive-thru lane of a restaurant that lists the type and price of food items offered for sale at the establishment.

Sign, Easel - A sign displayed on a portable open frame, the outline of which (the frame) is roughly pyramidal in shape.

Sign, Election - See *Sign, Campaign*.

Sign, Existing - Any sign that was erected, mounted, or displayed prior to the effective date of this Ordinance.

Sign, Flashing - Any lighted or electrical sign which emits light in sudden transitory bursts.

Sign, Fluttering - A sign or device, all or part of which is set in motion by movement of the atmosphere, mechanical, electrical, or any other means. Such items include rotating or otherwise moving devices, whirligigs, balloons, pennants, posters, propellers, discs, ribbons, streamers, strings of light bulbs, spinners, and flags (other than flags, pennants, insignia, or symbols of any religious, governmental, non-profit or not-for-profit organization when not displayed in connection with a commercial promotion or as an advertising device) regardless of whether they contain written messages.

Sign, Freestanding - Any permanently mounted sign that is placed on or anchored in the ground and that is not attached to a building or other structure. Also referred to as pole, pylon, monument, or ground signs.

Sign, Ground - See *Sign, Monument.*

Sign, Hanging - A sign that is mounted to or hung from porches, overhangs, or hanging

projecting signs that may substitute for a building wall sign.

Sign, Identification - A sign which gives the nature, logo, trademark, or other identifying symbol, address, or any combination of the name, symbol, and address of a building, business, development, or establishment on the premises where it is located.

Sign, Illuminated - A sign characterized by the use of artificial light, either projecting through its surface (internally illuminated) or reflecting off its surfaces (externally illuminated).

Sign, Illuminated, Externally - A sign characterized by the use of artificial light which reflects off its surface.

Sign, Illuminated, Internally - A sign characterized by the use of artificial light projecting through its surface.

Sign, Inflatable - A sign that is either expanded to its full dimensions or supported by gasses contained within the sign or sign parts at a pressure greater than atmospheric pressure.

Sign, Interior - Any sign placed within a building, but not including window or door signs.

Sign, Marquee - A sign displayed on or attached flat against the surface or surfaces of a marquee.

Sign, Message Board - A changeable copy sign permitted only in institutional uses that is intended to provide schedules of events, rules, regulations, announcements, or similar messages excluding commercial advertisement or promotional messages. Institutional uses include educational, religious, recreational, civic, municipal, and other non-commercial institutional uses including historic markers that are allowable in any zoning district under the zoning district regulations.

Sign, Monument - A freestanding sign constructed on the ground with a continuous footing or foundation with the base of the sign at grade. Also referred to as a ground sign.

Sign, Multiple Occupant Development - A freestanding common sign identifying the names of more than one business or activity conducted within a multiple occupant development which is controlled by a single owner, landlord, or association. Examples include shopping centers, industrial parks, and office complexes.

Sign, Nonconforming - Any sign which was legal at the time of erection or display, but as of the effective date of this Ordinance or any subsequent amendment hereto, does not conform to a provision or provisions of this Ordinance.

Sign, Off-Premise Advertising - Any sign that identifies or communicates a message related to an activity conducted, a service rendered, or a commodity sold which is not the primary activity, service, or commodity provided on the site where the sign is located. Also referred to as outdoor advertising or billboard sign.

Sign, Off-Premise Directional - A temporary sign that is displayed for a forty-eight (48) hour period only, the purpose of which is limited exclusively to the identification of a use or occupancy located elsewhere and which tells the location of or route to such use or occupancy. Such signs are used to advertise events such as open houses, exhibits, or other recurring events.

Sign, On-Premise - Any sign that disseminates information that directly relates to the use of the property on which it is located and is not a separate and distinct use.

Sign, On-Premise Directional and Instructional - A sign, generally informational, that has a

purpose secondary to the use of the lot on which it is located. Such signs include, but are not limited to: directional arrows, "No-Parking," "Entrance," "Enter," "Exit," "Telephone," "Open," "Closed," and other directives. Also included are common signs indicating hours of operation, which credit cards are accepted, groups or associations to which the business belongs, or clubs or groups which utilize, recommend, inspect, or approve the business for use by its members. Not included are signs that display a commercial message.

Sign, Parked Motor Vehicle or Trailer - A permanent or temporary sign affixed, painted on, placed in, or upon any parked vehicle or which is parked or mounted for the primary purpose of providing signs not otherwise allowed by this Ordinance.

Sign, Perimeter, Retaining Wall, or Fence - Any principal sign attached to a wall or fence, painted on the wall or fence surface, or erected and confined within the limits of a wall or fence and displays only one sign surface.

Sign, Permanent - A sign attached to a building, structure, or the ground in a non-temporary manner and made of materials intended for more than short term use.

Sign, Permitted - A sign for which a valid permit or registration has been issued.

Sign, Pole - A freestanding sign mounted on a pole.

Sign, Political - See *Sign, Campaign*.

Sign, Portable - Any sign with a frame or stand designed to be transported from place to place and not permanently installed. This definition excludes restaurant menu sandwich boards and easels.

Sign, Principal - A chief or main sign containing the facility identification and/or logo that is oriented to a public right-of-way.

Sign, Projecting - A sign oriented perpendicular to a building or structure that is wholly or partly dependent upon a building or structure for support. Examples include signs over sidewalks and shingle signs.

Sign, Real Estate - A temporary sign erected by the owner or his agent advertising the real property upon which the sign is located for rent, for lease, or for sale.

Sign, Residential Subdivision Entrance - A permanent sign that identifies a subdivision or neighborhood and is located internal to and visible from the initial point of entry to a subdivision or from surrounding streets.

Sign, Roof - Any sign, sign structure, painted sign, or sign extending above or higher than the cornice of a building.

Sign, Sandwich Board - A portable sign shaped like an A-frame with a sign panel on one or both sides, where the sign panel is integral to the structure of the sign.

Sign, Special Event - A temporary sign advertising events providing a community service, events promoting the community or in the public interest sponsored by governmental, religious, charitable, civic, fraternal, or similar non-profit or for-profit organizations.

Sign, Specific Information Service - For the purposes of this Ordinance, specific information service signs are signs placed on Interstate 20 to provide motorists with information on essential travel services (gas, food, lodging, etc.) that are available at local interchanges.

Sign, Temporary - A sign that is used only for a short period of time and is not permanently

mounted.

Sign, Time and Temperature - An electrical sign utilizing lights going on and off periodically to display the current time and temperature.

Sign, Unlawful - Any sign that does not have a sign permit or registration, or has been installed, erected, constructed, or maintained in violation of any of the terms of this Ordinance.

Sign, Unsafe - See *Sign, Dilapidated.*

Sign, Window or Door - A sign that is applied or attached to the exterior or interior of a window or door, or located in such manner within a building that it can be seen from the public way or from adjacent property.

Significant Tree - See *Tree, Significant*.

Single-Family Dwelling - See *Dwelling, Single-Family*.

Single-Family Detached Dwelling - See *Dwelling, Single-Family Detached.*

Small Maturing Tree - See *Tree, Small Maturing.*

Solid Waste - Any non-hazardous garbage, refuse, or sludge from a waste treatment facility or water supply plant.

South Carolina Manufactured Housing Board - A board authorized by State statute to regulate the construction, repair, modification, installation, tie-down, hook-up, and sale of manufactured homes in South Carolina, which Board has adopted for regulation of manufactured homes the Federal *Manufactured Housing Construction and Safety Standards*, promulgated by HUD, and contained in the Board's *Manufactured Housing Regulations, May 26, 1990*.

Specified Anatomical Areas - The male or female genitals including the vulva or more intimate parts of the female genitals, or bare human buttocks, anus, or the areola or nipple of the female breast.

Specified Sexual Activities means and includes any of the following:

A. The fondling or other erotic touching of human genitals, pubic region, buttocks, anus, or female breast.
B. Sex acts, normal or perverted, actual or simulated including intercourse, oral copulation, or sodomy.
C. Masturbation, actual or simulated.
D. Excretory functions as a part of or in conjunction with any of the activities set forth in A through C above.

Stormwater Detention - A provision for storage of stormwater runoff and the controlled release of such runoff during and after a flood or storm.

Stream, Environmentally Sensitive - A stream that is listed on the SCDHEC 303(d) Impaired Waters list and/or a stream designated by the US Fish and Wildlife Service as a critical habitat for an endangered aquatic species.

Stream, Intermittent - A stream with seasonal flows as indicated on dashed blue lines on United States Geological Service (USGS) 7.5 quadrangle topographic maps.

Stream, Perennial - A stream which under normal conditions flows continuously year round as displayed by solid blue lines on United States Geological Service (USGS) 7.5 quadrangle topographic maps.

Street - Any publicly or privately maintained thoroughfare (street, road, drive, avenue, circle, way, lane, boulevard, etc.) or space which has been dedicated, deeded, designed, or used for vehicular traffic that provides access to more than three (3) parcels of land. Access within multiple parcel group developments is excluded from this definition. The words *street* and *road* shall be used interchangeably.

Street, Arterial - A major traffic route within Kershaw County. For purposes of this classification, an arterial street shall be any road that is projected to receive in excess of 4,000 average daily trips (ADT) per the most recent edition of the *Institute of Transportation Engineers (ITE) Trip Generation Manual* and the *ITE Trip Generation Handbook*.

Street, Light Commercial and Industrial (LC/I) - Collector roads connecting adjoining light commercial and light industrial development to major arterial roads. For purposes of this classification, a light commercial and industrial road shall be any primarily commercial and/or industrial road that is projected to receive 2,001-4,000 average daily trips (ADT) per the most recent edition of the *Institute of Transportation Engineers (ITE) Trip Generation Manual* and the *ITE Trip Generation Handbook*.

Street, Private - A vehicular way not dedicated for public use or maintenance.

Street, Residential Collector (RC) - A street connecting residential development to major arterial roads. For purposes of this classification, the distinction between a residential local and a residential collector classification shall be that a residential collector street shall be projected to receive in excess of 2000 average daily trips (ADT) per the most recent edition of the *Institute of Transportation Engineers (ITE) Trip Generation Manual* and the *ITE Trip Generation Handbook*.

Street, Residential Local (RL) - An internal subdivision street with usage largely restricted to local traffic. For purposes of this classification, a residential local street shall be any residential road that is projected to receive no more than 2,000 average daily trips (ADT) per the most recent edition of the *Institute of Transportation Engineers (ITE) Trip Generation Manual* and the *ITE Trip Generation Handbook*.

Structure - Anything that is built or constructed with a fixed location on the ground, or attached to something having a fixed location on the ground. Structures include, but are not limited to walls, buildings, fences, signs, and swimming pools.

Structure, Accessory - *See Building, Accessory.*

Structure, Attached - A structure attached to another structure by an integral roof system or a dwelling unit or manufactured home attached to another structure by an integral roof system and conditioned space.

Structure, Detached - A structure that is not attached to another structure by an integral roof system or a dwelling unit or manufactured home that is not attached to another structure by an integral roof system and conditioned space.

Structure, Nonconforming - See *Nonconformity*.

Subdivision - All divisions of a tract or parcel of land into two or more lots, building sites, or other divisions for the purpose, whether immediate or future, of sale, lease, or building development, and includes all division of land involving a new street or change in existing streets, and includes re-subdivision which would involve the further division or relocation of lot

lines of any lot or lots within a subdivision previously made and approved or recorded according to law; or, the alteration of any streets or the establishment of any new streets within any subdivision previously made and approved or recorded according to law, and includes combinations of lots of record.

Subdivision, Exempt - An exempt subdivision is one that meets the following conditions:

A. The combination or recombination of portions of previously platted lots where the total number of lots is not increased and the resultant lots are equal to the standards of this Ordinance and other applicable regulations.
B. The division of land into parcels of five acres or more where no new street is involved.
C. The combination or recombination of entire lots of record where no new street or change in existing streets is involved.
D. The division of land to create a cemetery lot.
E. The division of land by will or inheritance under the statute of descent and distribution as long as no new street is involved.
F. The division of land by gift conveyed by deed as long as no new street is involved. Such exemption shall be limited to the conveyance of land from one member to another member of the same immediate family i.e. (husband, wife, mother, father, children, grandchildren, brothers, sisters).
G. A parcel of land that is proposed to be used as the site for a utility subdivision, power line easement or right-of-way, pumping station, pressure regulating station, electricity regulating station, gas pressure control station, or similar facility.

Subdivision, Major - Any subdivision other than an exempt subdivision or one which does not qualify as a minor subdivision, a large acreage residential development, or a planned development district.

Subdivision, Minor - A minor subdivision is a subdivision which does not involve any of the following:

A. The creation of more than ten (10) lots.
B. The creation of any new street.
C. The extension of public water or sewer lines.
D. The installation of drainage improvements through one (1) or more lots to serve one (1) or more other lots.
E. The extension of an existing minor or major subdivision or development under the same ownership or control which would in effect create more than ten contiguous lots.
F. The creation of lots that cannot meet the driveway maximum number and separation standards.

Surveyor - A person who is registered by the South Carolina State Board of Engineering Examiners to practice land surveying in South Carolina.

Temporary Portable Storage Container – A large container designed and rented or leased for the temporary storage of commercial, industrial, or residential household goods, that does not contain a foundation or wheels for movement. Examples of this use include piggyback containers that can be transported by mounting on a chassis, and “POD” type boxes that can be transported on a flatbed or other truck; but do not include prefabricated sheds that are not designed for transport after erection, or commercial trailers used by construction or other uses in the regular performance of their business.

Temporary Use - A limited-time use as permitted in the zoning and district regulations section of this Ordinance. Examples include fairs and carnivals, yard sales, Christmas tree sales, temporary portable classrooms, office trailers, and real estate offices.

Top of Bank - The uppermost limit of the active channel of a stream during "bank full" conditions, typically marked by a break in slope.

Tower Notification Zone – an area within 1¼ times the height of the tower or antenna from the center of the base of the communications tower or antenna.

Townhouse - See *Dwelling, Townhouse.*

Tract - See *Lot.*

Travel Trailer - See *Recreational Vehicle*.

Tree - A usually tall, woody plant, distinguished from a shrub by having comparatively greater size and longevity.

Tree, Evergreen - A tree which retains its foliage for the majority of the year. Examples include most conifers such as pines, hollies, and cedars.

Tree, Large Maturing - A single trunk tree whose canopy dimensions have the potential to reach at least forty-five (45) feet tall and twenty-five (25) feet wide at maturity.

Tree, Medium Maturing - A single trunk tree whose canopy dimensions have the potential to reach at least twenty-five (25) feet tall and twenty (20) feet wide at maturity.

Tree, Significant - A healthy pine tree of twenty (20) inches or greater diameter at breast height (DBH) and all other tree species of eight (8) inches or greater diameter at breast height.

Tree, Small Maturing - A single trunk or multi-stem dimensioned tree that has the potential to reach at least fifteen (15) feet tall and fifteen (15) feet wide at maturity.

Triplex - See *Dwelling, Triplex.*

Underbrush - Nuisance bushes, vines, and similar rank plant growth beneath the tree canopy.

Undeveloped (Land or Parcel) - A parcel in which the natural landscape has not been modified by current or past structures, facilities, or other modifications of the natural landscape on and/or below ground or water.

Unimproved Road - See, *Road, Unimproved.*

Use - The purpose or activity for which land or any building thereon is designed, arranged, or intended, or for which it is occupied or maintained.

Use Permit - The compliance certification issued when the use and/or occupancy of an existing structure has been changed, converted, or altered upon determination by the Planning Official or Building Official that the proposed use of the building or land conforms to the requirements of this Ordinance.

Use, Accessory - See *Accessory Use.*

Use, Conditional - See *Conditional Use.*

Use, Institutional - See, *Institutional Use.*

Use, Nonconforming - See *Nonconformity.*

Use, Non-Residential - See *Non-Residential Use*.

Use, Principal - See *Principal Use.*

Use, Temporary - See *Temporary Use.*

Utility - Any or all utility services to a subdivision, including water, electricity, telephone, cable television, gas, and sanitary sewerage, whether such utilities are supplied by a private individual or company or a governmental entity.

Variance - A modification of the area regulations of this Ordinance, granted by the Board of Zoning Appeals, where such modification will not be contrary to the public interest, and where, owing to conditions peculiar to the property, a literal enforcement of the Ordinance would result in unnecessary and undue hardship, and where such modification will not authorize a principal or accessory use of the property which is not permitted within the zoning district in which the property is located.

Vegetation - Any object of natural growth.

Vendor - Any person who sells or solicits sales of food, drink, or other merchandise from a pushcart, bicycle cart, or other cart, operable motor vehicle, wagon, sled, or carriage propelled by human, animal, or mechanical power.

Visual Clearance Area - An area with a height of between two and one-half (2½) feet and ten (10) feet, measured from the upper edge of the curb or pavement, and located within an intersection or driveway sight triangle, where no sign, planting, fence, building, wall, or other structure shall be located. Exception: Poles and support structures less than twelve (12) inches in diameter may be permitted in such areas.

Wet Pond - See *Pond, Wet*.

Wetlands - Areas that are inundated or saturated by surface or ground water at a frequency and duration sufficient to support, and that under normal circumstances do support a prevalence of vegetation typically adapted for life in saturated soils. The key indicator for wetlands is the presence of hydric soils. Wetlands generally include swamps, marshes, bogs, and similar areas.

Yard - An open space that lies between the principal or accessory building or buildings and the nearest lot line. Such yard is unoccupied and unobstructed from the ground upward except as may be specifically provided by this Ordinance.

Yard, Buffer - See *Buffer Area.*

Yard, Required - That part of a yard between a lot line and the minimum required building setback lines, within which no structure shall be located except as provided by this Ordinance. Also refer to *Setback Area.*

Yard, Required Front - A yard extending the full width of the front of a lot between the front (street) right-of-way line or property line and the front building setback line.

Yard, Required Rear - A yard extending the full width of the lot in the area between the side lot line and the rear building setback line.

Yard, Required Side - A yard extending the full length of the lot in the area between the side lot line and a side building setback line.

Zero Lot Line Development - See *Development, Zero Lot Line.*

Zero Lot Line Dwelling - See *Dwelling, Zero Lot Line.*

Zoning District - A specifically delineated area or district within which regulations and requirements govern the use, placement, spacing, and size of land and buildings.

Zoning Map, Official - See *Official Zoning Map.*

ARTICLE 3…..ZONING REGULATIONS

3:1 PRIMARY ZONING DISTRICT REGULATIONS

3:1.1 Establishment of Zoning Districts, Purpose of Districts, and Rules for the Interpretation of District Boundaries

3:1.1-1 Establishment of Districts

The following districts are hereby established for use in the unincorporated areas of Kershaw County in accord with the Comprehensive Plan adopted by Kershaw County:

Table 3-1 PRIMARY ZONING DISTRICTS	
Zoning Map Symbol	**District Name/Description**
R-15	Low Density, Single-Family Residential District
R-10	Medium Density Residential District
R-6	High Density Residential District
O-I	Office-Institutional District
B-2	General Business District
B-3	Limited Business District
I-1	Industrial District
GD	General Development District
RD-1	Rural Resource District
RD-2	Rural Resource District
MRD-1	Rural Resource District

Table 3-2 SPECIAL PURPOSE DISTRICTS	
Zoning Map Symbol	**District Name/Description**
PDD	Planned Development District
HOD	Historic Overlay District
AOD	Airport Overlay District
LWOD	Lake Wateree Overlay District

3:1.1-2 Purpose of Districts

Collectively, as stated in the Preamble, these districts are intended to advance the purposes of this Ordinance. Individually, each district is designed and intended to accomplish the following more specific objectives.

3:1.1-3 Primary Districts

A. **Residential Districts -** Residential districts are created to foster, preserve, protect, and promote safe, healthy, and attractive residential communities. Whereas these regulations are intended to protect residential districts from incursions of inappropriate uses, they are not intended to isolate residential communities from convenient access to community-oriented services, institutions, businesses, and employment opportunities.

1. **R-15, Low Density, Single-Family Residential District** - The R-15 Residential district is intended to foster, preserve, and protect at low densities, areas of the community/County in which the principal use of land is for detached, single-family dwellings and limited residential support facilities at low densities.
2. **R-10, Medium Density Residential District** - The R-10 Residential district is intended to foster, protect, and accommodate single-family and two-family residential development and limited residential support facilities in areas so designated.
3. **R-6, High Density Residential District** - The R-6 Residential district is intended to accommodate higher density residential development and a variety of housing types on small lots or in project settings in areas accessible by major streets and in proximity to commercial uses and employment opportunities.

B. **Institutional and Commercial Districts** - Institutional and commercial zoning districts serve the community and should not be isolated from the community. Zoning should encourage the clustering of commercial establishments in nodes which are convenient to population concentrations. Such commercial development will focus on neighborhood-oriented services such as groceries, pharmacies, offices, dry cleaners, restaurants, etc. Neighborhood centers are also excellent locations for public facilities such as post offices, libraries, and health clinics.

The location of institutional and commercial zoning districts should not result in encroachment of incompatible development into established residential areas. Commercial establishments that are non-neighborhood service oriented can be clustered in regional commercial centers or malls with appropriate traffic management improvements.

1. **O-I, Office and Institutional District** - The O-I district is intended to accommodate office, institutional, and residential uses in areas whose character is mixed or in transition. It is designed principally for use along major streets and subdivision borders characterized by older houses to help ameliorate the consequences of change impacting these areas, and provide a transitional buffer between potentially incompatible commercial and residential development.
2. **GD, General Development District** - This is a multiple use district, the intent of which is to promote the "highest and best use" of land without negatively impacting surrounding land uses or environmental resources. The GD zoning district has the widest range of permitted residential uses - from single-family, to apartments, to manufactured home parks. The GD district also allows for the widest range of non-residential uses - from retail to agricultural to light industrial. The GD zoning district affords the applications of the Comprehensive Plan's mixed use principals.
3. **B-2, General Business District** - The B-2 district is intended to provide for the development and maintenance of commercial and business uses strategically located to serve the traveling public, the community, and the larger Midlands region. Toward this end, a wide range of business and commercial uses are permitted herein.
4. **B-3, Limited Business District** - The B-3 district is intended to meet the commercial and service needs generated by nearby residential areas. Goods and services normally available in this district are of the convenience variety. The size of these districts should relate to surrounding residential markets and the locations should be at or near major intersections, in proximity to residential areas, and/or on the periphery of residential areas, moderating transition between residential and commercial uses.

5. **I-1, Industrial District -** The intent of the I-1 Industrial district is to accommodate wholesaling, distribution, storage, processing, and manufacturing uses in an environment suited to such uses and operations while promoting land use compatibility through the application of performance standards within and beyond the boundaries of this district. Toward these ends, residential development is not permitted herein, nor is the establishment of this district on a street providing primary access to, or traversing, a residential district.

C. **Rural Resource Districts -** The only distinction of permitted uses among the rural resources districts is with their allowable uses of manufactured housing and mobile homes. Manufactured housing is not permitted in RD-1 zoning districts. MRD-1 zoning districts have special appearance standards for manufactured housing. Mobile homes are permitted in the RD-2 zoning districts only.

1. **RD-1, RD-2 and MRD-1, Rural Resource Districts -** The value of agricultural lands, woodlands, wetlands, and other resources which characterize this district are important to clean water, air, and to many natural cycles. These lands provide much of the character that makes Kershaw County an attractive place to live. The intent of this district, therefore, is to protect these area resources from development, which would needlessly alter their rural state and contribution to a balanced environment.

D. **Special Purpose Districts -** Regulations regarding each type of special purpose district are found in the special purpose district regulations provisions of this Article.

1. **Planned Development Districts (PDD) -** The intent of the planned development district is to encourage flexibility in the development of land in order to promote its most appropriate use; and to do so in a manner that will enhance the public health, safety, morals, and general welfare of the population.

   Within the PDD, regulations adapted to unified planning and development standards are intended to accomplish the purpose of zoning, design standards, and other applicable regulations to an equivalent or higher degree than where such regulations are designed to control uncoordinated development on individual lots or tracts, to promote economical and efficient land use, provide an improved level of amenities, foster a harmonious variety of uses, encourage creative design, and produce a better environment.

   In view of the substantial public advantage of a planned development, it is the intent of these regulations to promote and encourage or require development in this form where appropriate in character, timing, and location, particularly in large undeveloped tracts.

2. **Historic Overlay Districts (HOD) -** A historic overlay district is designed and intended to promote the educational, cultural, economic, and general welfare of the community by providing a mechanism for the identification, recognition, preservation, maintenance, protection, and enhancement of existing historic and architecturally valuable structures and properties which serve as visible reminders of the social, cultural, economic, political, and/or architectural past, thereby:
   a. Fostering civic pride.
   b. Preserving local heritage.
   c. Fostering public knowledge and appreciation of structures and areas which provide a unique and valuable perspective on the social, cultural, and economic mores of past generations.
   d. Fostering architectural creativity by preserving physical examples of outstanding architectural techniques of the past.

e. Encouraging new structures and development that will be harmonious with existing structures, properties, and sites included in said districts.

3. **Airport Overlay District (AOD) -** The Airport Overlay District is designed to promote compatibility between aircraft operating in the vicinity of Woodward Field airport and surrounding property, by:
   a. Protecting and promoting the general health, safety, economy, and welfare of area residents.
   b. Protecting the dual interests of navigational safety and airport operations.
   c. Protecting property in the vicinity of the airport.
   d. Promoting the improvement and the utility of the airport and the public investment therein.
4. **Lake Wateree Overlay District (LWOD) -** Lake Wateree represents a wide diversity of land uses that have the potential to work at cross purposes: Residential, commercial, recreation, and conservation. The goals of the LWOD are to:
   a. Allow for a high quality of life for the residential users.
   b. Provide for commercial establishments serving the residential and tourist/recreational communities.
   c. Preserve water quality to protect the ecology of the Lake and its watershed.

3:1.1-4 Establishment of Official Zoning Map(s)

The boundaries of the zoning districts established by this Ordinance are shown on the Official Zoning Map(s) maintained in the Planning and Zoning Department. The Official Zoning Map(s) of the unincorporated areas of Kershaw County and all amendments, certifications, citations, and other matters entered onto the Official Zoning Map(s) are hereby made a part of this Ordinance and have the same legal effect as if fully set out herein.

No change of any nature shall be made on the Official Zoning Map(s) or matters shown thereon except in conformity with the procedures set forth in this Ordinance. Any unauthorized change of whatever kind by any person or persons shall be considered a violation of this Ordinance and punishable as provided by law.

3:1.1-5 Amendments to the Official Zoning Map(s)

Amendments to the Official Zoning Map(s), also referred to as map amendments or re-zonings, shall be adopted by ordinance as provided for by this Ordinance. Promptly after the adoption of a map amendment, the Planning Official shall alter or cause to be altered the Official Zoning Map for the affected jurisdiction to indicate the amendment and the effective date of the ordinance amending the map.

It is the intent of Kershaw County to maintain an electronic data base of the zoning by parcel and associated Tax Map Survey (TMS) number. This data base is imported into the County's Geographic Information System (GIS) so that zoning maps from a scale of individual parcel to county-wide can be generated. It is the responsibility of the Planning Official and the GIS Coordinator to maintain and verify this data base and to insure that electronically generated maps conform to the Official Zoning Map(s).

3:1.1-6 Rules for Interpretation of District Boundaries on the Official Zoning Map(s)

Where uncertainty exists as to the boundaries of districts shown on the Official Zoning Map(s), the following rules shall apply:

A. Boundaries indicated as approximately following the center lines of streets, highways, alleys, or public utility easements shall be construed to follow such center lines.
B. Boundaries indicated as approximately following platted lot or tract lines shall be construed as following such lines, whether public or private.
C. Boundaries indicated as approximately following political lines shall be construed as following such lines.
D. Boundaries indicated as following railroad lines shall be construed to be midway between the main tracks.
E. Boundaries indicated as approximately following the center lines of natural barriers such as rivers and streams shall be construed to follow such center lines.
F. Boundaries indicated as parallel to or extensions of features indicated in subsections A through E, above, shall be so construed. If distances are not specifically indicated on the Official Zoning Map, or in other circumstances not covered by subsections A through E, above, the boundaries shall be determined by the use of scale of such map.
G. Where uncertainties continue to exist after the application of the rules in this section, appeal for clarification may be taken to the Board of Zoning Appeals.

3:1.2 Establishment of Tables

The uses permitted in the several primary zoning districts established in this Article, the off-street parking requirements, and the dimensional requirements of each are set forth in this section. These requirements are presented through the use of tables.

Table 3-3 sets forth use and off-street parking requirements for each zoning district. Tables 3-4, 3-5, and 3-6 set forth lot area, yard, setback, height, density, floor area ratio, and impervious surface requirements for all districts.

3:1.3 Uses of Tables

The North American Industry Classification System is the basis for determining the use of property permitted in the various zoning districts. Where uncertainty exists relative to a given use not specifically listed by Table 3-3, the *NAICS Manual* should be consulted. In general, all uses listed by a given NAICS number and category should be construed as being permitted in the assigned zoning district, unless separately listed. It is not possible that every use within the NAICS sectors will be listed in the tables or covered in the *NAICS Manual*. However, the applicant may apply for a ruling from the Board of Zoning Appeals that the proposed use is the same as or substantively similar to an allowable or conditionally allowable use that is listed in the tables, and therefore allowable. The Planning Official may rely on such rulings in making future use determinations.

Listings with a dash indicate multiple codes in a series. For example, 81112-4 means 81112, 81113, and 81114.

Uses listed in Table 3-3 that are not covered in the *NAICS Manual*, primarily residential and non-commercial uses, are identified by the letters “NA” (Not Applicable) in the NAICS column.

Where the letter "P" is shown, the use to which it refers is permitted as a use by right in the indicated district, provided it complies fully with all applicable development standards of this Ordinance.

Where the letter "C" is shown, the use to which it refers is conditionally permitted in the indicated district, subject to applicable requirements set forth in this Article.

Where the letter “N” is shown, the use to which it refers is not permitted in the indicated district.

A section number reference following a use category means the use must meet the additional conditions and requirements of the referenced section.

To aid in the use of Table 3-3, it is arranged by NAICS Sectors, followed by the uses and codes included in the respective sector:

Sector 11:	Agriculture, Forestry, Fishing, and Hunting
Sector 21:	Mining
Sector 22:	Utilities
Sector 23:	Construction
Sector 31-33:	Manufacturing
Sector 42:	Wholesale Trade
Sector 44-45	Retail Trade
Sector 48-49:	Transportation and Warehousing
Sector 51:	Information
Sector 52:	Finance and Insurance
Sector 53:	Real Estate, Rental, and Leasing
Sector 54:	Professional, Scientific, and Technical Services
Sector 55:	Management of Companies and Enterprises
Sector 56:	Administrative Support, Waste Management, and Remediation Services
Sector 61:	Educational Services
Sector 62:	Health Care and Social Assistance
Sector 71:	Arts, Entertainment, and Recreation
Sector 72:	Accommodation and Food Services
Sector 81:	Other Services (except Public Administration)
Sector 92:	Public Administration

Uses and NAICS code references are displayed within the appropriate sector in numerical order, beginning with Sector 11 (Agricultural, Forestry, Fishing, Hunting) and running through Sector 92 (Public Administration). Residential uses are listed following Public Administration, without sector references.

Table 3-3 SCHEDULE OF PERMITTED AND CONDITIONAL USES AND OFF-STREET PARKING REQUIREMENTS BY ZONING DISTRICTS

Zone Districts	NAICS	R-15	R-10	R-6	O-I	B-2	B-3	I-1	GD	RD-1, RD-2 MRD-1	Required Off-Street Parking (a)
Sector 11: Agriculture, Forestry, Fishing, and Hunting (Refer to Conditional Uses for Agricultural Facilities)											
Agricultural Production, Crops	111	N	N	N	N	N	N	N	P	P	NONE
Agricultural Production, Livestock, Animals	112										
Livestock	112111	N	N	N	N	N	N	N	N	P	NONE
Concentrated Animal Feeding Operations, CAFOs (Refer to Cond-itional Uses for Swine Operations)	NA	N	N	N	N	N	N	N	N	C	NONE
Hog and Pig Farming (Refer to Conditional Uses for Swine Operations)	1122	N	N	N	N	N	N	N	N	C	NONE
Poultry & Eggs	1123	N	N	N	N	N	N	N	N	P	NONE
Sheep and Goat Farming	1124	N	N	N	N	N	N	N	N	P	NONE
Animal Aquaculture	1125	N	N	N	N	N	N	N	P	P	NONE
Other Animal Production	1129	N	N	N	N	N	N	N	P	P	NONE
Horses and Other Equine Production	11292	N	N	N	N	P	N	P	P	P	NONE
Fur-Bearing Animal Production	11293	N	N	N	N	N	N	P	P	P	NONE
Forestry and Logging	113	N	N	N	N	N	N	P	P	P	NONE
Fishing, Hunting, Trapping	114	N	N	N	N	N	N	P	P	P	NONE
Support Activities for Agricultural/Forestry	115	N	N	N	N	P	N	P	P	P	1 per 1,000 GFA
Sector 21: Mining											
Mining	212	N	N	N	N	N	N	P	P	P	1 per employee
Sector 22: Utilities	221										
Electric, Gas, and Sanitary Services	221										
Electric	2211										
Generation	22111	N	N	N	N	P	N	P	P	P	1 per 500 GFA
Transmission	22112	P	P	P	P	P	P	P	P	P	1 per 500 GFA
Natural Gas (Transmission Only)	2212	P	P	P	P	P	P	P	P	P	1 per 500 GFA
Natural Gas (Storage)	23712	N	N	N	N	P	N	P	P	P	1 per 500 GFA
Water Supply Systems	22131										
Storage	22131	P	P	P	P	P	P	P	P	P	1 per 500 GFA
Treatment	22131	N	N	N	N	P	N	P	P	P	1 per 500 GFA

Zone Districts	NAICS	R-15	R-10	R-6	O-I	B-2	B-3	I-1	GD	RD-1, RD-2 MRD-1	Required Off-Street Parking (a)
Transmission	22131	P	P	P	P	P	P	P	P	P	1 per 500 GFA
Sewerage Systems	22132										
Collection	22132	P	P	P	P	P	P	P	P	P	1 per 500 GFA
Treatment	22132	N	N	N	N	N	N	P	P	P	1 per 500 GFA
Steam and Air Conditioning Supply	22133	N	N	N	N	P	N	P	P	N	1 per 500 GFA
Sector 23: Construction											
Building Construction-General Contract and Operative Builders	236	N	N	N	N	P	N	P	P	N	1 per 1,000 GFA
Heavy & Civil Engineering Construction	237	N	N	N	N	N	N	P	P	N	1 per 1,000 GFA
Special Trade Contractors	238	N	N	N	N	P	N	P	P	N	1 per 1,000 GFA
Sector 31-33: Manufacturing (Refer to Conditional Uses for Manufacturing Facilities)											
Food	311	N	N	N	N	N	N	C	C	N	1 per 1,000 GFA
Wild Game Processing (Refer to Conditional Uses for Rural and B-3 Businesses)	311612	N	N	N	N	N	N	P	N	P	2 per 500 GFA
Beverage and Tobacco	312	N	N	N	N	N	N	C	C	N	1 per 1,000 GFA
Textile Mills	313	N	N	N	N	N	N	C	C	N	1 per 1,000 GFA
Textile Product Mills	314	N	N	N	N	N	N	C	C	N	1 per 1,000 GFA
Apparel	315	N	N	N	N	C	N	C	C	N	1 per 1,000 GFA
Leather and Allied Products	316	N	N	N	N	C	N	C	C	N	1 per 1,000 GFA
Wood Products (Except Furniture)	321	N	N	N	N	C	N	C	C	N	1 per 1,000 GFA
Paper	322	N	N	N	N	N	N	C	N	N	1 per 1,000 GFA
Printing and Related Activities	323	N	N	N	N	C	N	C	C	N	1 per 1,000 GFA
Petroleum Products	324	N	N	N	N	N	N	C	N	N	1 per 1,000 GFA
Chemical Products	325	N	N	N	N	N	N	C	N	N	1 per 1,000 GFA
Plastic and Rubber Products	326	N	N	N	N	N	N	C	N	N	1 per 1,000 GFA
Nonmetallic Mineral Products - Cast	327	N	N	N	N	N	N	C	C	N	1 per 1,000 GFA
Nonmetallic Mineral Products - Other	327	N	N	N	N	N	N	C	N	N	1 per 1,000 GFA
Optical Lenses Makers	327215	N	N	N	N	C	N	C	C	N	1 per 1,000 GFA
Primary Metal	331	N	N	N	N	N	N	C	N	N	1 per 1,000 GFA
Fabricated Metal Products	332	N	N	N	N	C	N	C	C	N	1 per 1,000 GFA
Machinery	333	N	N	N	N	N	N	C	N	N	1 per 1,000 GFA
Computer and Electronic Products	334	N	N	N	N	N	N	C	C	N	1 per 1,000 GFA
Electrical Equipment, Appliances and Components	335	N	N	N	N	N	N	C	C	N	1 per 1,000 GFA
Transportation Equipment	336	N	N	N	N	N	N	C	N	N	1 per 1,000 GFA
Furniture and Related Products	337	N	N	N	N	C	N	C	C	N	1 per 1,000 GFA
Miscellaneous Manufacturing	339	N	N	N	N	N	N	C	C	N	1 per 1,000 GFA

Zone Districts	NAICS	R-15	R-10	R-6	O-I	B-2	B-3	I-1	GD	RD-1, RD-2 MRD-1	Required Off-Street Parking (a)
Jewelry Makers	339911	N	N	N	N	C	N	C	C	N	1 per 1,000 GFA
Jewelry Makers (Cases)	339914	N	N	N	N	C	N	C	C	N	1 per 1,000 GFA
Sector 42: Wholesale Trade											
Wholesale Trade-Durable Goods	423	N	N	N	N	P	N	P	P	N	1 per 5,000 GFA
Wrecking, Scrap and Salvage (Refer to Conditional Uses for Wrecking, Scrap, and Salvage Operations)	42314 42393	N	N	N	N	N	N	C	C	N	1 per 5,000 gross site area
Wholesale Trade-Non-Durable Goods	424	N	N	N	N	P	N	P	P	N	1 per 5,000 GFA
Auctions, Agricultural Products (Refer to Conditional Uses for Agricultural Products Auctions in Rural Zoning Districts)	424590	N	N	N	N	N	N	P	P	C	By individual review
Sector 44-45: Retail Trade											
Motor Vehicle Dealers	4411	N	N	N	N	P	N	P	P	N	1 per 350 GFA plus 1 per 5,000 outdoor display area
Motorcycle, Boat and Other Vehicle Dealers	4412	N	N	N	N	P	N	P	P	N	1 per 350 GFA plus 1 per 5,000 outdoor display area
Automotive Parts, Accessories and Tires	4413	N	N	N	N	P	N	P	P	N	1 per 500 GFA
Furniture and Home Furnishings	442	N	N	N	N	P	P	P	P	N	1 per 1,000 GFA
Electronics and Appliances	443	N	N	N	N	P	P	P	P	N	1 per 1,000 GFA
Building Materials, Garden Supplies	444										
Home Centers	44411	N	N	N	N	P	N	P	P	N	1 per 350 GFA
Paint and Wallpaper Stores (Refer to Conditional Uses for Rural and B-3 Businesses)	44412	N	N	N	N	P	C	P	P	N	1 per 350 GFA
Hardware Stores (Refer to Conditional Uses for Rural and B-3 Businesses)	44413	N	N	N	N	P	C	P	P	C	1 per 350 GFA
Other Building Material Dealers (Refer to Conditional Uses for Rural and B-3 Businesses)	44419	N	N	N	N	P	C	P	P	N	1 per 350 GFA
Lawn and Garden Equipment and Supplies Stores (Refer to Conditional Uses for Rural and B-3 Businesses)	4442	N	N	N	N	P	C	P	P	C	1 per 350 GFA
Food and Beverage Stores (Refer to Conditional Uses for Rural and B-3 Businesses)	445	N	N	N	N	P	P	P	P	C	1 per 350 GFA

Zone Districts	NAICS	R-15	R-10	R-6	O-I	B-2	B-3	I-1	GD	RD-1, RD-2 MRD-1	Required Off-Street Parking (a)
Convenience Stores (Refer to Conditional Uses for Rural and B-3 Businesses)	4451	N	N	N	N	P	P	P	P	C	1 per 350 GFA
Fruit and Vegetable (Refer to Conditional Uses for Rural and B-3 Businesses)	44523	N	N	N	N	P	P	P	P	C	1 per 350 GFA
Liquor Stores (Refer to Conditional Uses for Rural and B-3 Businesses)	4453	N	N	N	N	P	C	P	P	C	1 per 350 GFA
Health and Personal Care Stores (Refer to Conditional Uses for Rural and B-3 Businesses)	446	N	N	N	N	P	C	P	P	C	1 per 350 GFA
Gasoline Stations	447	N	N	N	N	P	N	P	P	P	1 per 500 GFA
Truck Stops	44719	N	N	N	N	P	N	P	P	N	1 per 500 GFA + 1 tractor trailer space per 5,000 gross site area
Clothing and Accessory Stores (Refer to Conditional Uses for Rural and B-3 Businesses)	448	N	N	N	N	P	C	P	P	N	
Sporting Goods, Hobbies, Books, and Music (Refer to Conditional Uses for Rural and B-3 Businesses)	451	N	N	N	N	P	C	P	P	C	1 per 350 GFA
General Merchandise Stores (Refer to Conditional Uses for Rural and B-3 Businesses)	452	N	N	N	N	P	C	P	P	C	1 per 350 GFA
Miscellaneous Retail	453	N	N	N	N	P	N	P	P	N	1 per 350 GFA
General Merchandise Auctions in Rural Zoning Districts (Refer to Conditional Uses)	453	N	N	N	N	P	N	P	P	C	1 per 75 GFA
Flea Markets and Used Merchandise Except Pawn Shops (Refer to Conditional Uses for B-3 and Rural Businesses)	4533	N	N	N	N	P	N	P	P	C	1.5 per stall
Manufactured Home Dealers	45393	N	N	N	N	P	N	P	P	N	1 per 500 GFA
Non-Store Retailers	454	N	N	N	N	P	P	P	P	N	1 per 500 GFA
Fuel Dealers	45431	N	N	N	N	N	N	P	P	N	1 per 1,000 GFA
Vendors, Seasonal Roadside Stands (Refer to Conditional Uses for Vendors and Seasonable Roadside Stands)	NA	N	N	N	N	C	C	C	C	C	2 per vendor
Vending Machines (Refer to Condition-al Uses for B-3 and Rural Businesses)	NA	N	N	P	P	P	C	P	P	C	2 spaces

Zone Districts	NAICS	R-15	R-10	R-6	O-I	B-2	B-3	I-1	GD	RD-1, RD-2 MRD-1	Required Off-Street Parking (a)
Sector 48-49: Transportation and Warehousing											
Air Transportation	481	N	N	N	N	P	N	P	P	P	By individual review
Rail Transportation	482	N	N	N	N	P	N	P	P	P	1 per 1,000 gross site area
Water Transportation	483	N	N	N	N	P	N	P	P	P	1 per 1,000 gross site area
Transit and Ground Passenger Transportation	485	N	N	N	P	P	P	P	P	N	1 per 100 GFA of public waiting area
Transit and Ground Passenger Transportation Stations & Stops Only	485	P	P	P	P	P	P	P	P	P	NA
Pipeline Transportation	486	N	N	N	N	P	N	P	P	P	1 per 1000 GFA
Scenic & Sightseeing Transportation	487	N	N	N	P	P	P	P	P	P	1 per 500 GFA
Support Activities for Transportation	488	N	N	N	N	N	N	P	P	N	1 per 500 GFA
Motor Vehicle Towing Services in B-2 Zoning Districts (Refer to Section 3:3, Conditional Uses)	NA	N	N	N	N	C	N	N	N	N	1 per 500 GFA
U. S. Postal Service	491	N	N	N	P	P	P	P	P	P	1 per 350 GFA
Warehousing, Storage, and Distribution Centers (Dead Storage Only)	493	N	N	N	N	P	N	P	P	N	1 per 5,000 GFA
Sector 51: Information											
Publishing Industries	511	N	N	N	N	P	N	P	P	N	1 per 750GFA
Motion Pictures and Sound Industries	512	N	N	N	N	P	N	P	P	N	1 per 500 GFA
Motion Picture Theaters	512131	N	N	N	N	P	P	N	P	N	1 per 4 seats
Broadcasting and Telecommunications	515-7	N	N	N	N	P	N	P	P	N	1 per 500GFA
Communication Towers and Antennas (Refer to Conditional Uses for Communication Towers and Antennas)	5172	N	N	N	C	C	C	C	C	C	Per approved site plan
Internet and Other Information Providers	518-9	N	N	N	P	P	P	P	P	N	1 per 500 GFA
Libraries and Archives	51912	P	P	P	P	P	P	P	P	P	1 per 400 GFA
Sector 52: Finance and Insurance											
Banks	521	N	N	N	P	P	P	P	P	N	1 per 350 GFA
Credit Intermediation	522	N	N	N	N	P	N	P	P	N	1 per 350 GFA
ATM Machines (Refer to Conditional Uses for Rural and B-3 Businesses)	52211	N	N	N	P	P	C	P	P	C	2 spaces
Pawn Shops	522298	N	N	N	N	P	N	P	P	N	1 per 350 GFA
Security and Financial Investments	523	N	N	N	P	P	P	P	P	N	1 per 350 GFA
Insurance Carriers and Related Activities	524	N	N	N	P	P	P	P	P	N	1 per 350 GFA

Zone Districts	NAICS	R-15	R-10	R-6	O-I	B-2	B-3	I-1	GD	RD-1, RD-2 MRD-1	Required Off-Street Parking (a)
Funds, Trust, and Other Financial Vehicles	525	N	N	N	P	P	P	P	P	N	1 per 350 GFA
Sector 53: Real Estate and Rental and Leasing											
Real Estate	531	N	N	N	P	P	P	P	P	N	1 per 350 GFA
Mini-Warehouses (Refer to Conditional Uses for Mini-Warehouses)	53113	N	N	N	N	C	N	C	C	N	Refer to Conditional Uses
Rental and Leasing Services	532	N	N	N	N	P	P	P	P	N	1 per 500 GFA
Video Tape Rental (Refer to Conditional Uses for Rural and B-3 Businesses)	53223	N	N	N	N	P	C	P	P	C	1 per 350 GFA
Sector 54: Professional, Scientific, and Technical Services											
Professional, Scientific, Technical Services (Refer to Conditional Uses for Rural and B-3 Businesses)	541	N	N	N	P	P	C	P	P	N	1 per 350 GFA
Veterinary Services	54194	N	N	N	N	P	N	P	P	P	1 per 350 GFA
Sector 55: Management Of Companies and Enterprises											
Mgmt. Of Companies and Enterprises (Refer to Conditional Uses for Rural and B-3 Businesses)	551	N	N	N	P	P	C	P	P	N	1 per 500 GFA
Sector 56: Administrative Support and Waste Management Services											
Administrative and Support Services (Refer to Conditional Uses for Rural and B-3 Businesses)	561	N	N	N	P	P	C	P	P	N	1 per 500 GFA
Landscape Services	56173	N	N	N	N	P	N	P	P	P	1 per 500 GFA
Waste Management Services	562										
Waste Collection	5621	N	N	N	N	N	N	P	P	P	1 per 500 GFA
Hazardous Waste Treatment and Disposal	562211	N	N	N	N	N	N	N	N	N	NA
Construction - Demolition Landfill (Refer to Conditional Uses for Construction and Demolition Landfills)	562212	N	N	N	N	N	N	C	C	C	1.25 spaces per employee
Solid Waste Landfill (Refer to Conditional Uses for Municipal Solid Waste Landfills)	562212	N	N	N	N	N	N	C	N	N	1.25 spaces per employee
Solid Waste Incinerators	562213	N	N	N	N	N	N	P	N	N	1.25 spaces per employee

Zone Districts	NAICS	R-15	R-10	R-6	O-I	B-2	B-3	I-1	GD	RD-1, RD-2 MRD-1	Required Off-Street Parking (a)
Other Non Hazardous Waste Treatment	562219	N	N	N	N	N	N	P	N	N	1.25 spaces per employee
Materials Recovery Facilities	562920	N	N	N	N	N	N	P	N	N	1.25 spaces per employee
All Other Waste Management	56299	N	N	N	N	N	N	P	N	N	1.25 spaces per employee
Sector 61: Educational Services											
Educational Services	611										
Pre-School, Kindergarten, Elementary and Middle Schools	6111	P	P	P	P	P	P	N	P	P	1 per 15 students, design capacity
High Schools	6111	P	P	P	P	P	P	N	P	P	1.5 spaces for each student, faculty, and staff per design capacity
Jr. Colleges, Colleges, Universities, Professional Schools	6112-3	N	N	N	P	P	P	P	P	P	1.5 spaces for each student, faculty, and staff per design capacity
Business Schools, Computer, and Management Training	6114-5	N	N	N	P	P	P	P	P	P	1.5 spaces for each student, faculty, and staff per design capacity
Other Schools and Instruction	6116	N	N	N	P	P	P	P	P	N	1.5 spaces for each student, faculty, and staff per design capacity
Educational Support Services	6117	N	N	N	P	P	P	P	P	N	1 per 500 GFA
Sector 62: Health Care and Social Assistance											
Ambulatory Health Care Services	621	N	N	N	N	P	N	P	P	N	1 per 300 GFA
Office of Physicians, Health Practitioners	6211-3	N	N	N	P	P	C	P	P	C	I per 200 GFA
Out Patient Care Centers	6214	N	N	N	P	P	P	P	P	N	1 per 300 GFA
Medical and Diagnostic Labs	6215	N	N	N	N	P	P	P	P	N	1 per 400 GFA
Home Health Care Services	6216	N	N	N	P	P	P	N	P	P	1 per 500 GFA
Other Ambulatory Health Care Services	6219	N	N	N	P	P	P	P	P	N	1 per 300 GFA
Hospitals	622	N	N	N	N	P	N	P	P	N	1 per bed
Nursing Care Facilities	6231	N	N	N	P	P	P	N	P	P	1 per 4 beds
Nursing and Residential Care Facilities	623										

Zone Districts	NAICS	R-15	R-10	R-6	O-I	B-2	B-3	I-1	GD	RD-1, RD-2 MRD-1	Required Off-Street Parking (a)
Residential Facilities for Physical or Mental Impairment	6232	P	P	P	P	P	P	N	P	P	1 per 4 beds
Substance Abuse Facilities	6232	N	N	N	N	P	N	N	P	N	1 per 4 beds
Community Care for Elderly	6233	P	P	P	P	P	P	N	P	P	1 per 4 beds
Other Residential Care Facilities	6233	P	P	P	P	P	P	N	P	P	1 per 4 beds
Social Assistance	624	N	N	N	N	P	P	N	P	N	1 per 350 GFA
Individual and Family Services	6241	N	N	N	P	P	P	N	P	P	1 per 350 GFA
Community, Food, and Housing and Emergency and Relief Services	6242	N	N	N	P	P	P	P	P	N	1 per 350 GFA
Vocational Rehabilitation Services	6243	N	N	N	P	P	P	P	P	N	1 per 350 GFA
Child/Adult Day Care Services Other than Family Daycare	6244	N	N	P	P	P	P	N	P	P	1 per 10 clients, design capacity
Sector 71: Arts, Entertainment and Recreation											
Performing Arts, Spectator Sports (Except Motorized Racetracks) and Related Industries	711	N	N	N	P	P	P	P	P	N	By individual review
Motorized Racetracks	711212	N	N	N	N	P	N	P	P	N	By individual review
Horse Racing (Training Only)	711212	N	N	N	N	N	N	P	P	P	By individual review
Animal Spectator Events	711219	N	N	N	N	N	N	P	P	C	By individual review
Museums and Similar Institutions (Refer to Conditional Uses for Rural and B-3 Businesses)	712	P	P	P	P	P	C	P	P	C	1 per 350 GFA
Fairs, Carnivals (Refer to Conditional Uses for Rural and B-3 Businesses and Temporary Uses for Fairs and Carnivals)	7113 71119	N	N	N	N	P	C	P	P	C	By individual review
Zoos and Botanical Gardens	71213	N	N	N	N	P	N	P	N	P	By individual review
Parks, Playgrounds, and Community Centers	71219	N	N	N	P	P	P	P	P	P	By individual review
Amusement and Recreation Industries	713										
Amusement Parks, Arcades	7131	N	N	N	N	P	N	P	P	N	1 per 400 gross site area
Golf, Tennis, and Swimming Clubs	71391	P	P	P	N	P	N	P	P	P	1 per 4 clients, design capacity
Marinas	71393	N	N	N	N	P	P	P	P	N	1.5 per slip or berth
Fitness and Recreational Sport Centers	71394	N	N	N	P	P	N	P	P	N	1 per 4 clients, design capacity
Bowling Centers	71395	N	N	N	N	P	N	P	P	N	4 per lane

Zone Districts	NAICS	R-15	R-10	R-6	O-I	B-2	B-3	I-1	GD	RD-1, RD-2 MRD-1	Required Off-Street Parking (a)
Hunt Clubs and All Other Amusement, Except Gun Club/Skeet	713990	N	N	N	N	P	N	P	P	P	By individual review
Gun Club and Skeet Ranges	713990	N	N	N	N	N	N	P	P	N	1 per target area
Sector 72: Accommodation and Food Services											
Accommodations	721										
Hotels and Motels	72111	N	N	N	N	P	N	N	P	N	1.5 per rental unit + 1 per 300 GFA of meeting and restaurant space
Bed and Breakfast Inns (Refer to Conditional Uses for Bed and Breakfast Inns)	721191	C	C	C	C	C	C	N	C	C	1.5 per bedroom
Bed and Breakfast Inns Hosting Weddings and Wedding Receptions (Refer to Conditional Uses for Bed and Breakfast Inns)	721191	N	N	N	N	N	N	N	N	C	1.5 per bedroom
Camps and RV Parks (Refer to Conditional Uses for Camps and RV Parks)	72121	N	N	N	N	N	N	N	C	C	3 per campsite
Rooming and Boarding Houses, Dormitories, Group Housing	72131	N	N	P	N	P	P	N	P	N	1 per bedroom
Eating Places, Excluding Drive-Ins (Refer to Conditional Uses for Rural and B-3 Businesses)	7221-2	N	N	N	N	P	C	P	P	C	1 per 125 GFA
Eating Places, Including Drive-Ins	7221-2	N	N	N	N	P	N	P	P	N	1 per 125 GFA
Special Food Services	7223	N	N	N	N	P	P	P	P	N	1 per 350 GFA
Drinking Places (Refer to Conditional Uses for Rural and B-3 Businesses)	7224	N	N	N	N	P	C	P	P	C	1 per 125 GFA
Sector 81: Other Services (Except Public Administration)											
Auto Repair and Maintenance	8111										
General Auto Repair	811111	N	N	N	N	P	N	P	P	N	3 per service bay or mechanic station
Other Repair	81112-4	N	N	N	N	P	N	P	P	N	3 per service bay or mechanic station
Personal and Laundry Services	812										
Personal Care Services - Beauty, Barber, Etc (Refer to Conditional Uses for Rural and B-3 Businesses)	8121	N	N	N	N	P	C	P	P	C	2.5 per chair
Tattoo Parlors	812199	N	N	N	N	N	N	N	N	N	Not applicable

Zone Districts	NAICS	R-15	R-10	R-6	O-I	B-2	B-3	I-1	GD	RD-1, RD-2 MRD-1	Required Off-Street Parking (a)
Funeral Homes and Death Care Services (Refer to Conditional Uses for Rural and B-3 Businesses)	8122	N	N	N	P	P	C	P	P	N	1 per 4 chapel seats
Cemeteries, Public	81222	N	N	N	N	P	N	P	P	P	By individual review
Crematories	81222	N	N	N	N	N	N	P	P	N	1 per 4 chapel seats
Laundry and Dry Cleaning Services (Refer to Conditional Uses for Rural and B-3 Businesses)	8123	N	N	N	N	P	C	P	P	C	1 per 350 GFA
Coin Operated Laundry/Office in Multi-Family Or Manufactured Home Park	81231	N	N	P	P	P	N	N	P	N	1 per 250 GFA
Pet Care (Enclosed Facility - Kennels)	81291	N	N	N	N	P	N	P	P	P	1 per 500 GFA
Pet Care (Unenclosed Facility)	81291	N	N	N	N	N	N	P	P	P	1 per 1,000 gross site area
Photo Finishing	81292	N	N	N	N	P	P	P	P	N	1 per 350 GFA
Automotive Parking Lots and Garages	81293	N	N	N	P	P	P	P	P	N	Not applicable
Sexually Oriented Business (Refer to Conditional Uses for Sexually Oriented Businesses)	81299	N	N	N	N	N	N	N	C	N	1 per 250 GFA
All Other Personal Services	81299	N	N	N	N	P	N	P	P	N	1 per 350 GFA
Religious, Fraternal, Civic, Professional, Political and Business Organizations	813										
Religious Organizations	8131	P	P	P	P	P	P	N	P	P	1 per 4 seats
All Other Organizations	8132-9	N	N	N	N	P	P	N	P	N	By individual review
Sector 92: Public Administration											
Executive, Legislative, and General Government	921	N	N	N	P	P	P	P	P	N	1 per 300 GFA
Justice, Public Order, and Safety	922										
Courts	92211	N	N	N	N	P	N	P	P	N	1 per 300 GFA
Police Protection	92212	P	P	P	P	P	P	P	P	P	1 per 350 GFA
Legal Council and Prosecution	92213	N	N	N	P	P	P	P	P	N	1 per 350 GFA
Correctional Institutions	92214	N	N	N	N	N	N	P	P	N	By individual review
Fire Protection	92216	P	P	P	P	P	P	P	P	P	Volunteer - 4 per bay Staffed – one per staff of max shift
Administration of Human Resources	923	N	N	N	P	P	P	P	P	N	1 per 350 GFA
Administration - Environmental and Housing (Refer to Conditional Uses for Rural and B-3 Businesses)	924-5	N	N	N	P	P	C	P	P	N	1 per 350 GFA

Zone Districts	NAICS	R-15	R-10	R-6	O-I	B-2	B-3	I-1	GD	RD-1, RD-2 MRD-1	Required Off-Street Parking (a)
Administration of Economic Programs (Refer to Conditional Uses for Rural and B-3 Businesses)	926	N	N	N	P	P	C	P	P	N	1 per 350 GFA
Residential Uses											
Site-built Housing	NA										
Single-Family Detached	NA	P	P	P	P	P	P	N	P	P	2 per dwelling
Duplex, Triplex, Quadruplex	NA	N	P	P	P	P	P	N	P	N	2 spaces per unit
Multi-Family, Apartments	NA	N	N	P	N	P	P	N	P	N	1.5 spaces per unit
Townhouses (Refer to Conditional Uses for Townhouses)	NA	N	N	C	C	C	C	N	C	N	2 spaces per unit
Patio Homes Refer to Conditional Uses for Patio and Zero Lot Line Homes)	NA	C	C	C	C	C	C	N	C	N	2 spaces per unit
Triplex and Quadruplex	NA	N	N	P	N	P	P	N	P	N	2 spaces per unit
Manufactured Dwellings	NA										
Manufactured Housing	NA	N	N	P	N	N	N	N	P	(b)	2 spaces per unit
Mobile Homes	NA	N	N	N	N	N	N	N	N	(c)	2 spaces per unit
Manufactured Housing Parks	NA	N	N	P	N	N	N	N	P	N	2 spaces per unit
Park Model Homes	NA	N	N	(e)	N	N	N	N	(e)	(d)	2 spaces per unit
Modular Homes	NA	P	P	P	P	P	P	N	P	P	2 spaces per unit
Accessory Uses to Residential Uses											
Bathhouses and Cabanas	NA	P	P	P	P	P	P	N	P	P	None
Non-Commercial Piers and Docks	NA	P	P	P	P	P	P	N	P	P	None
Private Residential Community Centers, Clubhouses, and Recreational Facilities	NA	P	P	P	P	P	P	N	P	P	1 per 750 gross site area
Domestic Animal Shelters and Horse Stables	1152	P	P	P	P	P	P	N	P	P	None
Non-Commercial Greenhouses	NA	P	P	P	P	P	P	N	P	P	None
Storage Building/Workshop	NA	P	P	P	P	P	P	N	P	P	None
Accessory Apartments (Refer to Conditional Uses for Accessory Apartments)	NA	C	C	C	C	C	C	N	C	C	One
Swimming Pools, Tennis Courts	NA	P	P	P	P	P	P	N	P	P	None
Detached Garages and Carports	NA	P	P	P	P	P	P	N	P	P	None
Auxiliary Shed, Workshop	NA	P	P	P	P	P	P	N	P	P	None
Home Occupation (Refer to Conditional Uses for Home Occupations)	NA	C	C	C	C	C	C	N	C	C	None

Zone Districts	NAICS	R-15	R-10	R-6	O-I	B-2	B-3	I-1	GD	RD-1, RD-2 MRD-1	Required Off-Street Parking (a)
Horticulture, Gardening	NA	P	P	P	P	P	P	N	P	P	None
Family Daycare Home (Refer to Conditional Uses for Family Daycare Homes)	NA	P	P	P	P	P	P	N	P	P	None
Satellite Dishes, Etc.	NA	P	P	P	P	P	P	N	P	P	None
Accessory Uses to Non-Residential Uses											
Buildings, Structures	NA	P	P	P	P	P	P	P	P	P	Included in GFA
Open Storage (Refer to Conditional Uses for Open Storage)	NA	N	N	N	C	C	C	C	C	C	None
Temporary Uses											
All Temporary Uses (Refer to section on Temporary Uses)	NA	C	C	C	C	C	C	C	C	C	Refer to section on Temporary Uses

(a) Off-Street parking requirements computed on basis of number of spaces per square foot of Gross Floor Area (GFA).
(b) Manufactured housing permitted in the RD-2 and MRD 1 districts only.
(c) Mobile homes permitted as conditional use in the RD-2 district only.
(d) Park model homes are permitted as a conditional use in the RD-2 district, and in manufactured housing parks which are permitted in the R-6 and GD districts. Refer to conditional uses for park model homes and regulations for manufactured housing parks.

NA = Not Applicable

Table 3-4 SCHEDULE OF LOT AREA, YARD, SETBACK, HEIGHT, DENSITY, FLOOR AREA, AND IMPERVIOUS SURFACE REQUIREMENTS BY DISTRICT FOR RESIDENTIAL USES

Schedule of Lot Area, Yard, Setback, Height, Density, Floor Area, and Impervious Surface Requirements by District

RESIDENTIAL USES

DISTRICT	AREA (SQ FT.) (A)	STREET FRONTAGE WIDTH (FT.) (B)	SETBACKS (FT. FROM PROPERTY LINE) (C)			MAXIMUM BUILDING HEIGHT (FT.) (D)	MAXIMUM IMPERVIOUS SURFACE RATIO (E)	MAXIMUM DENSITY (F)
			FRONT	SIDE	REAR			
R-15	15,000 (.34 acre)	80	35	10	20	35	.50	2.9
R-10	10,000 (.22 acre) single-family 16,000 (.36 acre) duplex	75	25	10	20	35	.60	5.4
R-6	6,000 (.13 acre) single-family 4,000 (.09 acre) each additional dwelling unit	50	25	5	20	35	.60	8.7
O-I	10,000 (.22 acre)	50	35	10	20	35	.60	4.35
B-2	6,000 (.13 acre) single-family 4,000 (.09 acre) each additional dwelling unit.	40	35	10	20	4 stories	.60	8.7
B-3	6,000 (.13 acre)	40	35	5	20	35	.60	4.26
I-1	NA	NA	NA	NA	NA	NA	NA	NA
GD	6,000 (.13 acre) single-family 4,000 (.09 acre) each additional dwelling unit	50	35	10	10	4 stories	.60	8.7
RD-1, RD-2, & MRD-1	43,560 (1 acre)	100	35	20	30	35	.40	1

NOTES

SQ. FT. = square feet FT. = feet (NA) = Not Applicable

(A) The minimum lot size in R-15, R-10, R-6, O-I, B-2, B-3, I-1, and GD zoning districts for lots without access to public sewer or community onsite sewage treatment and disposal systems and public water (lots on septic tank and well) shall be three quarters (¾) of an acre (.75 acre). The minimum lot size in R-15, R-10, R-6, O-I, B-2, B-3, I-1, and GD zoning districts for lots without access to public sewer or community onsite sewage treatment and disposal systems but on public water shall be one-half (½) an acre (.50 acre).

(B) As measured on street frontage unless on cul-de-sacs or on curbs less than ninety (90) degrees.

(C) Refer to yard and setback modification provisions of this Ordinance.

(D) Measurement from average elevation of finished grade within twenty (20) feet of the structure to the bottom of the eave. Refer to exceptions.

(E) Measured as a percent of total lot area.

(F) Measurement in units per gross acre.

Table 3-5 SCHEDULE OF LOT AREA, YARD, SETBACK, HEIGHT, DENSITY, FLOOR AREA, AND IMPERVIOUS SURFACE REQUIREMENTS BY DISTRICT FOR RESIDENTIAL USES - CONSERVATION DESIGN

Schedule of Lot Area, Yard, Setback, Height, Density, Floor Area, and Impervious Surface Requirements by District

RESIDENTIAL USES CONSERVATION DESIGN

DISTRICT	**AREA (SQ. FT.)** (A)	**STREET FRONTAGE WIDTH (FT.)** (B)	**SETBACKS (FT. FROM PROPERTY LINE)** (C)			**MAXIMUM BUILDING HEIGHT (FT.)** (D)	**MAXIMUM IMPERVIOUS SURFACE RATIO** (E)	**MAXIMUM DENSITY DEVELOPED AREA** (F)	**MAXIMUM DENSITY ENTIRE PROJECT AREA** (F)
			FRONT	**SIDE**	**REAR**				
R-15 CD	6,000 (.13 acres)	50	25	5	.20	35	.60	7.26	2.9
R-10 CD	6,000 (.13 acre) single-family 8,000 (.18 acre) duplex	50	25	5	.20	35	.60	10.89	4.35
RD-1, RD-2 MRD-1 CD	10,890 (.25 acre)	50	25	25	.20	35	.60	4.0	1.6

NOTES

SQ. FT. = square feet FT. = feet (NA) = Not Applicable

(A) Conservation design development requires utilization of public sewer or community onsite sewage treatment and disposal systems and public water for these areas to apply.

(B) As measured on street frontage unless on cul-de-sacs or on curbs less than ninety (90) degrees.

(C) Refer to yard and setback modification provisions of this Ordinance.

(D) Measurement from average elevation of finished grade within twenty (20) feet of the structure to the bottom of the eave. Refer to exceptions.

(E) Measured as a percent of total lot area. Impervious surface rations in conservation design (CD) projects refer only to lots located in the developable area (max 40%) of the project.

(F) Measurement in units per gross acre. Density of conservation design developments expressed in density of the maximum 40% project site developable area and the overall density of the entire project site.

Example: RD-1, RD-2, MRD-1 Conservation Design 100 acre tract maximum 40% developable land and minimum 60% in land preservation.

Density of 4 units per acre on maximum 40 acres – 4 units/acre x 40 acres = 160 Units

Density of 1.6 units per acre on entire 100 acres – 160 units ÷ 100 acres = 1.6 units per acre

Table 3-6 SCHEDULE OF LOT AREA, YARD SETBACK, HEIGHT, DENSITY, FLOOR AREA, AND IMPERVIOUS SURFACE REQUIREMENTS BY DISTRICT FOR NON-RESIDENTIAL USES

Schedule of Lot Area, Yard, Setback, Height, Density, Floor Area, and Impervious Surface Requirements by District

NON-RESIDENTIAL USES

DISTRICT	AREA (SQ. FT.) (A)	STREET FRONTAGE WIDTH (FT.) (B)	SETBACKS (FT. FROM PROPERTY LINE) (C)			MAXIMUM BUILDING HEIGHT (FT.) (D)	MAXIMUM IMPERVIOUS SURFACE RATIO (E)	MAXIMUM FLOOR/AREA RATIO (F)
			FRONT	SIDE	REAR			
R-15	30,000 (.68 acres)	80	35	25	40	35	.50	.40
R-10	20,000 (.45 acres)	75	25	25	40	35	.60	.50
R-6	20,000 (.45 acres)	50	25	25	40	35	.60	.50
O-I	6,000 (.22 acre)	50	35	10	20	35	.75	.40
B-2	6,000 (.13 acre)	40	35	10. If adjacent to residential district, 40.	20. If adjacent to residential district, 40.	4 stories	.75	NONE
B-3	6,000 (.13 acre)	40	35	10. If adjacent to residential district, 40.	20. If adjacent to residential district. 40.	35	.75	NONE
I-1	10,000 (.45 acres)	75	35	10. If adjacent to residential district, 40.	20. If adjacent to residential district, 40.	NONE	.75	NONE
GD	6,000 (.13 acre)	50	35	10	10	4 stories	.75	NONE
RD-1, RD-2, and MRD-1	21,760 (.5 acre)	100	35	20	30	35	.40	.20

NOTES

SQ. FT. = square feet FT. = feet (NA) = Not Applicable

(A) The minimum lot size in all zoning districts for lots without access to public sewer or community onsite sewage treatment and disposal systems and public water (lots on septic tank and well) shall be three quarters (¾) of an acre (.75 acre). The minimum lot size in R-15, R-10, R-6, O-I, B-2, B-3, I-1, and GD zoning districts for lots without access to public sewer or Community Onsite Sewage Treatment and Disposal Systems but on public water shall be one half (½) an acre (.50 acre).

(B) As measured on street frontage unless on cul-de-sacs or on curbs less than 90 degrees.

(C) Refer to yard and setback modification provisions of this Ordinance. Zero lot lines are allowed on common wall buildings.

(D) Measurement from average elevation of finished grade within 20 feet of the structure to the bottom of the eave. Refer to exceptions.

(E) Measured as a percent of total lot area. Non-residential conservation design developments (CD) in R-15, R-10, R-6, and RD zones impervious surface area may be increased to .75 of the developable area of the project.

(F) Measured as a percent of total lot area. Non-residential conservation design developments (CD) - all floor (building footprint) areas to be located in developable areas: (maximum 40% of total site area).

3:2 GENERAL ZONING PROVISIONS

3:2.1 Yards and Setbacks

3:2.1-1 Determination of Front, Side, and Rear Yards and Setbacks

The required front, side, and rear yards for individual lots, as set forth for the particular zoning district within which a given lot is located, shall be measured inward toward the center of said lot from all points along the respective front, side, and rear property lines of the lot. In general the principal building and front yard shall be oriented towards the public street right-of-way and the rear yard shall be the opposite property line and correspond to the rear of the principal building. In general, this orientation also pertains to Lake Wateree properties and properties located on other water bodies.

For existing lots of record with no direct street frontage, the Planning Official shall determine the property line to be considered as the front based upon existing or proposed principal building orientation to private drive, orientation to other site features such as lakes or ponds, orientation relative to closest public street, orientation of neighboring buildings, and general lot configuration. Side and rear yards will be set relative to the determined front yard.

3:2.1-2 Setback Areas (Yards)

A. The area between the front property line and the zoning district required front setback shall be considered the front setback area or front yard.
B. The area between the rear property line and the zoning district required rear setback shall be considered the rear setback area or rear yard.
C. The areas between the side property line(s) and the zoning district required side setback shall be considered the side setback area(s) or side yard(s).

3:2.1-3 Yard and Setback Modifications

A. **Alleys -** Where a lot abuts upon an alley, one-half of the alley width may be considered as a portion of the required yard or setback.
B. **Front Yards**
   1. The front yard setback requirements for dwellings shall not apply on any lot where the average setback of existing buildings located wholly or in part within 100 feet on each side of such lot within the same block and zoning district and fronting on the same side of the street is less than the minimum required setback. In such cases, the setback on such lot may be less than the required setback, but not less than the average of the setbacks of the aforementioned existing buildings.
   2. Where a lot fronts on two nonintersecting streets, or two intersecting streets forming an angle of 60 degrees or less, front yards shall be provided on both streets.
C. **Side Yards -** When the intersection of two streets forms a corner lot, then the following criteria for side setbacks shall apply:
   1. **Detached Single-Family Residential**: The side setback on the side street shall not be less than one half of the required front setback.
   2. **All Uses Other Than Detached Single-Family Residential**: The side setback on the side street shall be not less than the required front setback.

D. **Zero Lot Line Developments** - Zero lot line means the location of a building on a lot in such a manner that one or more of the building's sides rests directly on a side lot line. Zero lot lines are allowable in the following developments:
   1. Patio homes and zero lot line housing permitted under the conditional uses section for such housing in this Ordinance.
   2. Group developments on adjacent tracts of land under the same ownership or control permitted under the group development regulations of this Ordinance.
   3. Planned development districts (PDD) permitted under the PDD regulations of this Ordinance.

   Zero lot line buildings with common walls must meet all applicable building codes.

3:2.1-4 Example of Setbacks, Yards, and Buildable Area

The illustration represents setbacks in the R-15 Residential zoning district. For setback information in all other zoning districts, refer to Tables 3-4, 3-5, and 3-6.

Illustration of Setbacks, Yards, and Buildable Area

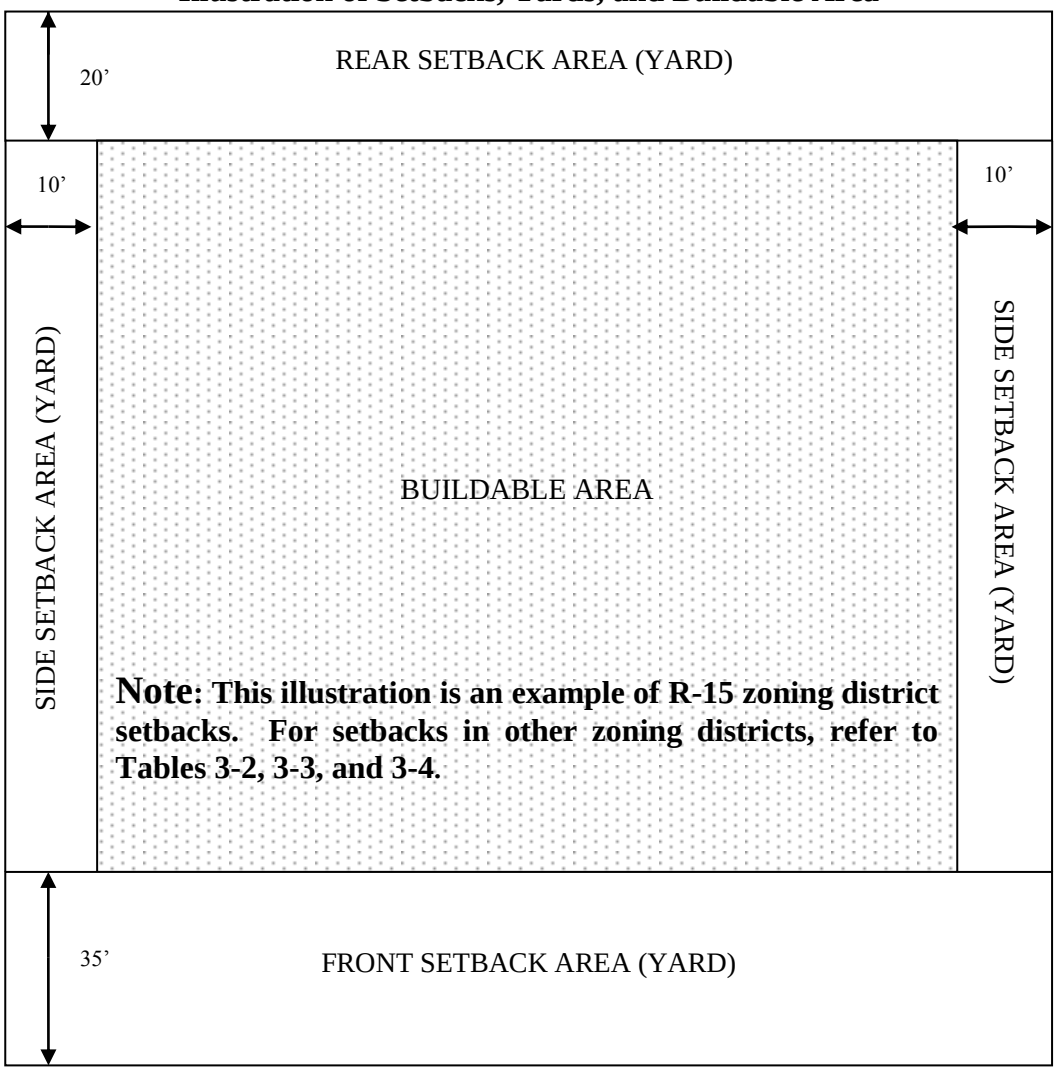

3:2.1-5 Buildable Area

Once the required yard areas of a given lot have been established, the remaining area of the lot which is not included in any required front, side, or rear yard shall be known as the buildable area**.**

Every building or structure hereafter erected or established shall be located within the buildable area as defined herein, and in no case shall such buildings extend beyond the buildable area into the respective front, side, or rear yard setbacks, other setbacks, or into public rights-of-way, except for the following:

A. Ornaments, eaves, chimneys, steps, cornices, windowsills, awnings, and canopies, which may project from the buildable area into any required yard a distance not to exceed two (2) feet.
B. Accessory uses, as specified in this section.
C. Fences, walls, and hedges not to exceed ten (10) feet in height; provided that no such structure or hedge shall impede visibility as required by this section; further provided that no such fence, wall, or hedge shall exceed four (4) feet in height when located in a front yard setback area. Fences or walls designed to enclose a residential PDD may be built to a height of ten (10) feet in any yard area, subject to approval for safety by the Building Official. All fences and walls used as part of the buffer area requirements must have a finished side that is facing the adjoining property. The interior side of the fence or wall may be finished as owner deems appropriate.
D. Awnings in the O-I, B-2, B-3, I-1, GD, RD-1, RD-2, and MRD-1 districts and marquees in the GD, B-2, and I-1 districts; provided they extend over a sidewalk and project no closer than eight (8) feet to the curb.
E. Driveways, walkways, access and utility easements, parking areas, pavements, buffer areas, and other non-structural improvements.

3:2.2 Use of Land or Structures

3:2.2-1 Conformity with Zoning District Regulations

No land or structure shall be used or occupied, and no structure or portions thereof shall be constructed, erected, altered, enlarged, or moved, unless in conformity with all of the regulations specified for the zoning district in which it is located. The minimum lot area, yards, buffer areas, and open space required by the regulations for each lot, parcel, or building existing at the time of the passage of this Ordinance shall not be encroached upon or reduced, or considered as required yards or open space for any other building. Yards or lots created after the effective date of this Ordinance shall meet at least the minimum requirements for the zoning district in which they are created.

3:2.2-2 Number of Permitted Dwellings Per Lot

No more than one duplex or single-family detached dwelling where allowable by Table 3-3 shall be permitted on a lot of record; however, where the lot of record is of sufficient size and scale to meet the minimum lot area requirements for two single-family detached dwellings, a second single-family dwelling, including a manufactured home where allowed by Table 3-3, may be permitted; provided all applicable lot area, setback, and road frontage requirements are met for both dwellings as if they were established on individual lots, and so arranged to ensure public

street access in the event the property on which the dwellings are located is subsequently subdivided for sale or transfer.

A. **Attached Dwelling Units** - As allowable in the respective zoning district, the attachment of two structures for the purposes of making them one duplex or one single-family detached dwelling unit is allowed under the following conditions:
   1. **Site-Built Housing**
      a. No more than two structures may be combined to form a single unit.
      b. Both structures shall be constructed to residential building code standards.
      c. The connecting structure that forms the attachment shall be constructed to residential building code standards and shall be conditioned space.
      d. The roofing system of the resultant duplex or single-family detached dwelling unit shall be integrally connected.
   2. **Manufactured and Modular Housing**
      a. No more than two manufactured housing units or modular housing units may be combined to form a single unit.
      b. Each manufactured housing or modular unit shall be set up independently per the set up provisions of this Ordinance.
      c. The connecting structure that forms the attachment shall be constructed to residential building code standards and shall be conditioned space.
      d. The passage into the connecting structure from each manufactured housing or modular unit shall utilize existing door openings. No structural modification of either unit shall be permitted.
      e. The roof of the connecting structure shall be integrally connected to both manufactured housing or modular units.

3:2.3 Nonconformities

3:2.3-1 Existing Nonconforming Lots of Record

Where the owner of a lot at the time of the adoption of this Ordinance does not own sufficient land to enable him to conform to the dimensional requirements of this Ordinance, such lot may nonetheless be used as a building site and the Building Official is authorized to issue a permit for the use of the property provided that all applicable setback requirements are not reduced below the minimum specified in this Ordinance by more than twenty-five (25) percent. Dimensional (setback) reductions greater than twenty-five (25) percent shall be referred to the Board of Zoning Appeals for consideration of a variance, observing normal review procedures. If, however, the owner of two or more adjoining lots with insufficient land dimensions decides to build on or sell off these lots, they must first be combined to comply with the dimensional requirements of this Ordinance.

3:2.3-2 Existing Nonconforming Uses, Buildings, and Structures

Nonconforming uses, buildings, or structures are declared by this Ordinance to be incompatible with permitted uses in the districts in which they are located.

However, to avoid undue hardship, the lawful use of any such use, building, or structure at the time of the enactment, amendment, or revision of this Ordinance may be continued in accord with the following provisions:

A. The change of a tenant or change of ownership of a nonconforming use shall not affect the operation of the nonconforming use.
B. Any nonconforming use may be changed to any conforming use. A nonconforming use may be changed to another nonconforming use which will have less of an adverse impact and will be more compatible with surrounding property than the current or previous nonconforming use.
C. Normal maintenance, repair, or improvement of a nonconforming building or of a building occupied by a nonconforming use is permitted.
D. A nonconforming use or building shall not be enlarged or extended by more than ten (10) percent of the gross floor area; or ten (10) percent of the yard area in the case of outside storage or truck unloading. Where such enlargement is proposed, it shall be allowed only if all applicable setbacks, buffer areas, and off-street parking requirements are met. Enlargements or extensions greater than ten (10) percent shall be referred to the Board of Zoning Appeals for a variance.
E. A nonconforming use or building shall not be re-established, reoccupied, or replaced after discontinuance of the use or structure for a period of 365 days except as provided for in section F below.
F. Non-conforming manufactured housing may be re-occupied or replaced in accordance with section E above after discontinuance of use, damage, or destruction for a period of up to 1,095 days (three years) if the owner-occupant can demonstrate exceptional hardship to the Board of Zoning Appeals. Fees for such petition to the Board of Zoning Appeals shall be waived.
G. A nonconforming mobile home and/or a nonconforming manufactured home, once removed, shall not be replaced by a mobile home, but may be replaced by a manufactured home, provided such manufactured home is in full compliance with the requirements of the manufactured housing installation, license, and registration regulations of this Ordinance.
H. No building which has been damaged by any cause whatsoever to the extent of more than fifty (50) percent of the fair market value of the building immediately prior to the damage shall be restored except in conformity with the regulations of this Ordinance, and all rights as a nonconforming use are terminated. If a building is damaged by less than fifty (50) percent of the fair market value, it may be repaired or reconstructed if work is substantially completed within twelve (12) months of the date of such damage. The provisions of this subsection shall not apply to any bona fide residence, including manufactured homes used for residential purposes. Said uses may be reestablished regardless of the extent of damage.

3:2.4 Temporary Uses

The following temporary uses may be permitted by the Planning Official, subject to the conditions herein:

A. Tents or other temporary structures for the conduct of any permitted use in the non-residential zoning districts for a period not to exceed sixty (60) days.
B. Open lot sales of Christmas trees in the B-2, B-3, GD, RD-1, RD-2, or MRD-1 districts for a period not to exceed forty-five (45) days.
C. Contractor's office and/or equipment shed in any district for a period covering the construction phase of a project not to exceed one (1) year, unless re-permitted; provided that such office be placed on the property to which it is appurtenant and all required permits for the project have been obtained.

D. Temporary "sale" stands in the B-2, GD, RD-1, RD-2, and MRD-1 districts for a period not to exceed thirty (30) days.

E. Yard Sales, Garage Sales, Attic Sales, Tag Sales, or Similar Types of Sales

1. Residential Uses - Limited to two (2) per year at any given location, in all zoning districts except I-1. Such sales shall be limited to not more than two consecutive days per event. All items to be sold shall be owned, utilized, and maintained by persons living on or in connection with the premises which they occupy, and shall not have been acquired or consigned for the purposes of resale. One (1) on-premise and a maximum of two (2) off-premise directional signs per event are permitted, and must be located off the street right-of-way. No such sign shall be greater than four (4) square feet in sign face area, and four and one-half (4½) feet in height. Such signs shall not be erected more than twenty-four (24) hours prior to the advertised event, and shall be removed within twenty-four (24) hours after the event has terminated.
2. Civic and Non-Profit Institutions - Institutional uses including educational, religious, recreational, civic, municipal, and other institutional uses may hold up to six (6) fund-raising yard sales, garage sales, attic sales, tag sales, or similar types of sales per year. Such events must be conducted on the premise or property owned or permanently leased by the institutional organization. Such sales shall be limited to not more than two consecutive days per event. All items to be sold must be contributed to the institutional organization and shall not have been acquired or consigned for the purpose of resale. One (1) on-premise and a maximum of two (2) off-premise directional signs per event are permitted, and must be located off the street right-of-way. No such sign shall be greater than four (4) square feet in sign face area, and four and one-half (4½) feet in height. Such signs shall not be erected more than twenty-four (24) hours prior to the advertised event, and shall be removed within twenty-four (24) hours after the event has terminated.

F. Portable classrooms as an accessory use to an existing building in any district for cultural, community, educational facilities, or religious complexes for an indefinite period provided all required setbacks for the district in which the structures are to be located shall be observed and maintained.

G. Temporary office trailers in any commercial or industrial district where the principal building is being expanded, rebuilt, or remodeled for the conduct of business while the principal building is under construction.

H. Temporary structure for use or storage of material or goods following destruction of a principal use, not to exceed sixty (60) days, unless re-permitted.

I. Real estate sales office in any district for a period not to exceed twelve (12) month increments providing no cooking or sleeping accommodations are maintained in the structure. A temporary use permit for a real estate sales office may be renewed providing that the project is still under development.

J. Festivals, fairs, carnivals, circuses, and concerts shall be located no closer than 500 feet of a residential zoning district and shall operate no later than 11:00 p.m., for a period not exceeding twenty-one (21) days. The temporary use application must be accompanied by a parking plan showing the number of parking spaces and adequate ingress and egress to the site. The application may be subject to approval by the Kershaw County Sheriff's Department, the SC Department of Public Safety, and the Kershaw County Fire Marshal, as applicable. These provisions are not applicable for festivals, fairs, carnivals, circuses, concerts, and other events conducted within stadiums, arenas, and other facilities specially

designed to accommodate such activities and venues. Nor shall these provisions have jurisdiction on parades other than parades on County roads.

K. A temporary use permit may be issued by the Planning Official for an appropriate period of time not to exceed twelve (12) month increments for nonconforming buildings, structures, or uses incidental to building construction, land development, or when deemed to be generally beneficial, provided that the owner of such temporary nonconforming use agrees to implement installation requirements deemed appropriate by the Planning Official and to remove the temporary nonconforming use upon expiration of the permit. In determining installation requirements, the Planning Official shall consider the type of structure, the use of the structure, and duration of use. Installation requirements may include temporary anchoring, potable water supply, waste water disposal, and power supply.

L. Temporary Portable Storage Containers are allowed without a permit in all zoning districts for a period not to exceed thirty (30) days in any one calendar year under the following conditions:
   1. No container shall be more than eight (8) feet in height, nor more than 16 feet in length in any residential zoning district.
   2. Containers shall not be stacked vertically.
   3. Containers shall be located so as to minimize visibility from both the public street and residential uses, and shall not be located in any required setback area nor on any public property.

3:2.5 Regulations for Accessory Structures and Uses

3:2.5-1 Accessory Uses to Observe Required Setbacks

Unless specifically provided herein, all accessory uses and structures shall observe all required setbacks, yard, and other requirements applicable to the principal building or use for the district within which they are located. Without exception, no accessory use may be located in any required buffer area.

3:2.5-2 General Requirements

A. The number of accessory buildings shall not exceed three (3) on any lot or parcel in the R-15, R-10, or the R-6 districts. No maximum on the number of accessory buildings in other districts.

B. Accessory buildings in residential districts shall not be used for storage in connection with a trade, except with an approved home occupation permit.

C. Accessory buildings and structures shall not exceed fifty (50) percent of the gross floor area (GFA) of the principal building or use in the R-15, R-10, or the R-6 districts, or thirty-five (35) percent of the buildable area to the rear of the principal building, whichever is greater. No maximum area specified for other districts. Refer to the following illustration.

Illustration of 35% Rear Buildable Area

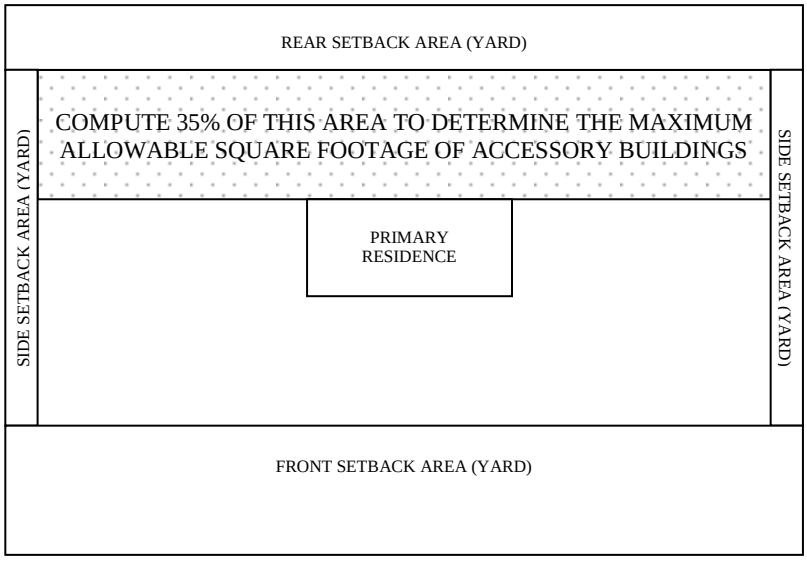

D. The use of mobile or manufactured homes, shipping containers, or similar structures as accessory buildings shall not be permitted in any zoning district.
E. Privacy and decorative fences and walls are permitted along the property line of any lot or parcel in compliance with the visibility requirements of this section. All fences and walls used as part of the buffer area requirements must have a finished side that is facing the adjoining property. The interior side of the fence or wall may be finished as owner deems appropriate.

3:2.5-3 Location of Accessory Structures

Accessory structures and uses are permitted anywhere within the buildable area of a lot or parcel unless specifically regulated, and are permitted within required setback yard areas under the following conditions:

A. **Off-Street Parking and Loading Spaces** - Off-street parking and loading spaces are permitted in required yard and setback areas, but not in required buffer areas.
B. **Freestanding Signs** - Freestanding signs are permitted in all required yards and front yard buffer areas.
C. **Detached Accessory Buildings, Sheds, and Structures for Dry Storage; Greenhouses, Carports, Garages, Etc.** - Detached accessory buildings, sheds, and structures for dry storage; greenhouses, carports, garages, etc. located in the rear yard may be located three (3) feet from the side and/or rear property line.
D. **Stables, Shelters, and Pens for Housing Animals** (**Non Agricultural Production**)
   1. **Parcels Less than Three (3) Acres**:
      On parcels less than three (3) acres, stables, shelters, and pens for housing animals shall be located in the rear of the principal building only; provided such uses shall be located no closer than:
      a. Ten (10) feet from any property line; or
      b. three (3) feet to any property line adjacent to a street right-of-way or adjacent property which may not be used for building or development (e.g. swamps, wetlands).
   2. **Parcels Larger than Three (3) Acres**:

On parcels larger than three (3) acres, stables, shelters, and pens may be located in the side yard provided that the side yard setback requirements are met, or in the rear of the principal building areas provided such uses shall be located no closer than:

a. Ten (10) feet from any property line; or
b. three (3) feet to any property line adjacent to a street right-of-way or adjacent property which may not be used for building or development (e.g. swamps, wetlands).

E. **Paddock Fences** - Paddock fences may be located in required yards and setback areas under the following conditions:

1. **Lots Less than Three (3) Acres**:
   a. Residentially Zoned Lots Less than Three (3) Acres - In rear of the principal building only, but no closer than ten (10) feet to the property line.
   b. Non-Residentially Zoned Lots with Less than Three (3) Acres - In rear of the principal building only, but no closer than five (5) feet to the property line.
2. **Lots Greater than Three (3) Acres**:
   a. Residentially Zoned Lots Greater than Three (3) Acres - In all side or rear yards but no closer than ten (10) feet to the property line.
   b. Non-Residentially Zoned Lots Greater than Three (3) Acres - In all front, side, or rear yards up to the property line.
3. **Lot Lines of all Properties Adjacent to Street Right-of-Way, Existing Equestrian Uses, or Property Which May Not Be Used for Building or Development** (e.g. swamps, wetlands) **and All Non-Residentially Zoned Lots** - In all required yards and setback areas up to the property line.

F. **Swimming Pools, Tennis Courts, and Recreational Uses** - These uses may be located in all side or rear yard areas; provided said uses shall be no closer than ten (10) feet to the nearest property line, and shall have lighting shielded or directed away from adjoining residences.

G. **Ground Supported Communication, Reception Antennas, and Satellite Dishes** - These uses may be located in rear and side yards only, but no closer than five (5) feet to the property line, and if located in the buildable area, shall not extend or be located in front of any principal building.

H. **Gatehouses, Entry or Security Structures** - Such structures are permitted in the required setback areas provided they are no closer than five (5) feet to the property line, no more than 300 square feet in size, and remain out of the driveway sight triangle. One (1) such structure per property is allowable and no such structure shall be used as a residence.

3:2.5-4 Accessory Structures without Principal Building

Accessory structures, where allowed as an accessory to residential and non-residential uses, are allowed to be erected on lots of record without the principal structure. Such accessory structures shall conform to all the requirements of this section. If a principal structure is subsequently erected on the lot, both the accessory and principal structure must comply with all applicable requirements of this Ordinance. The location, size, or any other factor of the pre-existing accessory structure may not be considered as grounds for a variance from any requirement imposed on the accessory and/or principal structure.

3:2.6 Exceptions to Height Limitations

The height limitations of this Ordinance shall not apply to church spires, belfries, cupolas, domes not intended for human occupancy, monuments, water towers, utility poles, chimneys,

conveyors, flag poles, masts, roof mounted mechanical equipment, or communication towers and antennas; provided, however, that communication towers/antennas and water tanks shall be separated from any adjoining property line of a single-family residential zone or use by a distance equal to one (1) foot for each one (1) foot in height, measured from the nearest residential property line.

3:2.7 Prohibited Lighting

In order to minimize light pollution, glare and light trespass; to conserve energy and resources; to maintain night time safety and utility; and to curtail the degradation of the night time visual environment, the following lighting features are prohibited in the unincorporated areas of Kershaw County:

A. Search lights.
B. Laser source lights.
C. Any similar high-intensity light except those used in emergencies by police, fire, or EMS personal.

3:3 CONDITIONAL USES

3:3.1 Accessory Apartments

Accessory apartments, where permitted as conditional uses, shall meet the following conditions:

A. The principal structure (dwelling) must be owner-occupied.
B. The apartment, whether attached or detached, cannot exceed fifty (50) percent of the gross floor area of the principal dwelling or contain more than two bedrooms.
C. The apartment must be a complete living space with kitchen and bathroom facilities separated from the principal unit.
D. An accessory apartment may be accessory only to a single-family dwelling, and not more than one apartment shall be allowed per dwelling or lot.
E. The apartment shall meet all yard setback requirements and, where detached from the principal dwelling, shall be set back not less than twenty (20) feet from the principal dwelling.
F. Where detached from the principal residence and readily apparent from the street, the accessory apartment shall be compatible in appearance and orientation with the principal residence and the surrounding community.
G. A third off-street parking space shall be required.
H. Neither the primary residence nor the accessory apartment shall be a manufactured home.

3:3.2 Home Occupations

Home Occupations, as defined by this Ordinance, shall meet the following requirements where conditionally permitted by Table 3-3.

A. The home occupation shall be carried on wholly within the principal residence. Attached or detached garages, storage buildings, barns, workshops, and other auxiliary structures may be used only for the storage of parts and materials.

B. The floor area dedicated to such use shall not exceed twenty-five (25) percent of the floor area of the principal residence.
C. No activity shall be conducted out of doors, nor shall there be any outdoor storage, display, or refuse area in the yard.
D. No merchandise or articles shall be displayed so as to be visible from outside the principle residence.
E. No person not residing in the principle residence shall be employed on the premises.
F. It shall be a violation of this Ordinance for a person to operate a home occupation business without having first received a use permit as required by this Ordinance.
G. No traffic shall be generated in an amount above that normally expected in a residential neighborhood.
H. No parking is needed above that accommodated in residential off-street parking.
I. There is no alteration whatsoever of the residential character of the building(s) and/or premises.
J. The occupation, profession, or trade shall be properly licensed, and shall not generate any noise, glare, heat, vibration, smoke, dust, or odor perceptible to adjacent uses.
K. No display, rental, or sale of wholesale or retail goods or other commodity other than those prepared on the premises shall be allowed on the premises.
L. The occupation shall not be used for receptions, parties, etc. in which the resident receives a fee or compensation.
M. Home occupations where instruction such as, but not limited to dance, music, tutoring, and art, takes place shall comply with the following:
    1. No parking shall be permitted on the street. Drop off and pick up must take place directly on the instructor's property.
    2. The number of students taught in any one class session shall be limited to no more than six (6).
    3. There shall be a twenty (20) minute time period between the end of each class session before the beginning of the next.
    4. All such sessions shall end no later than 9:00 P.M.
N. Signage for home occupations shall comply with the following:
    1. The maximum sign surface area shall be two (2) square feet.
    2. Such signs shall not be illuminated.
    3. One building wall sign per street frontage is permitted.

3:3.3 Bed and Breakfast Inns

Bed and breakfast inns are intended to provide a unique transit lodging experience in predominantly residential environs. As a result, care should be taken to protect the environs that contribute to the experience of such lodging while promoting their use. Toward this end, bed and breakfast inns, where permitted by this Ordinance, shall:

A. Be occupied by the resident/owner.
B. Only be permitted in residential structures that are recognized as architecturally, historically, or culturally significant; or in residential structures that are significant by their unique location or character and that, through renovation and/or use as a bed and breakfast inn will contribute significantly to the ambience, character, or economic revitalization of the area and/or continued use of the property in question for residential purposes.

C. Have no more than a total of eight (8) guest rooms, combined, in the main residence and one auxiliary structure, with no more than fifteen (15) guests housed on any one floor.
D. Notice of the bed and breakfast application shall be sent to adjoining property owners.
E. Serve no meal other than breakfast.
F. Maintain the interior architectural integrity and arrangement of the structure.
G. Maintain the exterior architectural integrity of the structure and grounds, and make changes only if compatible with the character of the surrounding area.
H. Provide off-street parking on the basis of one space per guest room, plus two spaces for the resident innkeeper.
I. Unless otherwise permitted, bed and breakfast inns shall not be used for receptions, parties, or gatherings except for those of the owner's. Unless otherwise permitted, no receptions, parties, or gatherings in which the resident/owner receives any fee or compensation are permitted.
J. Under the following conditions, bed and breakfast inns may be used only for weddings and wedding receptions in which the resident/owner receives a fee or compensation:
   1. Such events shall take place only at bed and breakfast inns located in RD-1, RD-2, and MRD-1 zoning districts on properties of at least ten (10) acres.
   2. The number of such events shall be limited to four (4) per calendar month and shall take place on weekends only.
   3. There shall be no on-street parking.
   4. The number of guests and wedding party shall not exceed 250 persons.
   5. Amplified music shall cease at 10:00 P.M.
   6. All events shall end by 11:00 P.M. and the premises shall be vacated by all guests and support staff by 12:00 A.M. Guests registered at the bed and breakfast are not included in this requirement.
   7. All lighting shall be shielded as to not illuminate into the sky or to adjacent properties. Such lighting shall be turned off by 12:00 A.M.
   8. Catering facilities shall be DHEC approved.
   9. Permanent restroom facilities, handicapped facilities included, shall be located on the property and available to all guests. The number of restrooms shall be determined by industry standards.
   10. All adjacent property owners shall be notified that the bed and breakfast inn owner has been issued a permit to conduct weddings and wedding receptions on their property and shall be informed of procedures to file complaints for activities that disturb the neighborhood or harm the neighborhood character.
   11. The permit for such events shall expire after two (2) years and must be renewed if such events are to continue. The application process shall include a public comment period of 30 days. A notice of the renewal application and public comment period shall be published, at the applicant's expense, in a general circulation newspaper in the community and mailed to adjacent property owners at the beginning of the 30-day comment period. Comments received, complaints filed with the Planning and Zoning Department, and incident reports filed with the Kershaw County Sheriff's Department will be taken into consideration when reviewing the renewal application.
K. There shall be at least one toilet facility for every two (2) guest rooms.
L. A portable supplemental heater shall not be substituted for a permanent heating source; an emergency power source must be provided for hallways and stairs; at least one fire

extinguisher shall be provided for each floor; and each guestroom shall be provided with a properly functioning smoke detector.

M. Any swimming pool available to guests shall be constructed and operated in accordance with SCDHEC standards.
N. Appropriate commercial insurance, including property and liability coverage as a lodging facility shall be maintained.
O. Bed and Breakfast Inns providing food shall follow all South Carolina State Law regulations pertaining to food service.
P. Signage regulations for bed and breakfast inns shall comply with the following:
   1. One freestanding sign or one wall sign per street frontage is permitted so long as all signs are at least 100 feet apart as measured by the shortest straight line.
   2. The maximum sign surface area of freestanding sign shall be five (5) square feet with a maximum height of five (5) feet. The maximum sign surface area of wall sign shall be four (4) square feet.
   3. A freestanding sign shall be set back a minimum of five (5) feet from the front property line. The side setback shall be a minimum of ten (10) feet from side property line. If the property is located adjacent to a residential use, the minimum side property line setback will be fifteen (15) feet.
   4. Such sign may be externally illuminated as specified in the sign illumination provisions of this Ordinance.

3:3.4 Family Daycare Homes

3:3.4-1 Definition

Family Daycare Home - A family daycare home is a facility within a residence in which the operator (caregiver) resides, where child daycare is regularly provided for no more than six children who are unattended by their parent or legal guardian, including those children living in the home, and children who are related to the resident operator (caregiver).

Exemption: If child daycare is provided for only a child or children related to the resident caregiver and/or the child or children of only one unrelated family, then the facility is not a family daycare home and is not subject to these conditions.

3:3.4-2 Regulations for Family Daycare Homes

A. No caregiver other than one (1) family member living in the home shall be employed.
B. No more than six (6) children, including the caregiver's own child(ren) shall be cared for in the home.
C. Hours of operation shall be from sun-up to sundown. No overnight child care is permitted.
D. The home must be licensed and inspected by the South Carolina Department of Social Services (DSS) and must abide by all DSS regulations.

3:3.5 Camps and Recreational Vehicle Parks

Camps and recreational vehicle (RV) parks, where conditionally permitted by Table 3-3, shall comply with the following site and design standards listed below. Such parks are considered temporary occupancy, therefore no recreational vehicle or trailer will be allowed to remain in a park for more than three (3) months per year.

A. The site shall be at least two (2) acres in size.
B. The site shall be developed in a manner that preserves natural features and landscape.
C. The following dimensional requirements shall serve as parameters beyond which development shall not exceed.
   1. Maximum impervious surface ratio shall not exceed fifteen (15) percent of the project site.
   2. Minimum setbacks for all structures and recreational vehicles shall be:
      a. Street frontage: Fifty (50) feet
      b. All other property lines: Twenty-five (25) feet
D. Maximum density shall not exceed twelve (12) recreational vehicles per acre.
E. Buffering, screening, open space, and landscaping shall be as specified by provisions of this Ordinance.
F. Camping and RV park facilities shall be physically separated from public streets by channeling facility access to reverse frontage roads or single ingress and egress points. All drives shall be located at least 150 feet from any street intersection and shall be designated in a manner conducive to safe ingress and egress.
G. All streets and driveways within RV Parks shall be private and not public.
H. Each park site shall be serviced by public water and sewer systems approved by SCDHEC and the Kershaw County Utilities Department.
I. Two (2) parking spaces shall be provided at each campsite plus an additional common parking area to accommodate one (1) parking space per campsite.

3:3.6 Mobile Homes

A mobile home is a factory-built home built prior to enactment of the Federal *Manufactured Housing Construction and Safety Standards Act*, effective June 15, 1976.

A mobile home, as defined, shall not be established within the unincorporated area of Kershaw County. However, the use of an existing mobile home may be continued in accord with the provisions of the nonconformities section of this Ordinance, and/or relocated to another site, lot, or parcel within the RD-2 District provided:
A. The mobile home is currently registered in Kershaw County.
B. The mobile home has been used as a residence within 365 days of the date of the moving permit application.
C. The mobile home meets all setup, habitability, and compliance requirements of this Ordinance.

3:3.6-1 Replacement of Mobile Homes

A nonconforming mobile home, once removed, shall not be replaced by a mobile home, but may be replaced by a manufactured home, provided such manufactured home is in full compliance with the requirements of the manufactured housing installation, license, and registration regulations of this Ordinance.

3:3.7 Park Model Homes

A park model home (also referred to as park model trailer, park model cabin, or park model camper) is a recreational vehicle primarily designed and intended to provide temporary living quarters for recreation, camping, or seasonal use. It is built on a single chassis, mounted on

wheels, with a gross trailer area not exceeding 400 square feet in the setup mode. Each park model home shall be certified by its manufacturer as complying with ANSI A119.5.

A park model home may be located on a parcel of land in an RD-2 zoning district or in a manufactured home park for an indefinite period of time for seasonal, temporary, non-primary residential uses under the following conditions:

A. The park model is registered with the County and is placed on the tax roll as personal property. The registration shall contain an affidavit by the applicant stating:

   "By accepting this registration I do solemnly affirm that this park model unit will not be used as my primary residence and shall not be sold, rented, leased, loaned, or otherwise transferred as a primary residence."

B. The registration affidavit shall be filed with the Kershaw County Register of Deeds.
C. The park model shall be installed per the manufactured housing provisions of this Ordinance.

3:3.8 Manufactured Housing Parks

The establishment and operation of a manufactured housing park shall comply with the following design and development standards:

A. The park site shall be not less than three (3) acres, and have not less than 200 feet of frontage on a public dedicated and maintained street or road.
B. The park shall be served by public water and sewer systems, a system of storm drainage, and refuse disposal facilities, plans of which shall be approved by SCDHEC officials.
C. All dwelling spaces shall abut upon an asphalt or concrete driveway of not less than eighteen (18) feet in width which shall have unobstructed access to a street.
D. A description of the procedures of any proposed homeowners' association or other group maintenance agreement must be submitted to and be approved by the Planning and Zoning Commission.
E. All on-site roadway intersections shall be provided with a street light, and interior lights shall be provided at not less than 400-foot intervals. Lots in parks shall be sized and arranged so that there will be at least forty (40) feet of spacing between manufactured housing, and at least thirty-five (35) feet from the right-of-way of any street or drive providing common circulation.
F. All manufactured housing shall be installed in accord with the installation requirements of the South Carolina Code of Laws and regulations or standards adopted pursuant thereto, and shall meet all manufactured housing installation provisions of this Ordinance.
G. Not less than ten (10) percent of the park site shall be set aside and developed for common open space and recreational usage.
H. Permanent space numbers shall be provided on each street or driveway. Signs identifying space locations shall be provided at each street or driveway intersection. 911 address numbers shall be used when appropriate.
I. No manufactured housing space shall have direct access to a public street, but shall instead access an internal street system. All internal streets and drives are to be privately maintained.
J. The maximum number of mobile or manufactured housing spaces shall not exceed six (6) per acre.
K. Two parking spaces shall be provided for each designated manufactured housing space. Parking may be provided at the designated space or in community parking areas.

L. In the development of a park, existing trees and other natural site features shall be preserved to the extent feasible and in accordance with the Tree Protection provisions of this Ordinance.
M. Bufferyards shall be provided on the perimeter of the park in accord with the buffer requirements of this Ordinance.
N. A license shall be requisite to the opening or operation of a manufactured housing park and shall be subject to annual renewal.
O. Said license is issued by the Planning Official and may be revoked by the Planning Official for a violation of this Ordinance or other applicable ordinances and regulations governing the operation of such uses.
P. Site plans for manufactured housing parks shall be reviewed and approved by the Planning and Zoning Commission prior to issuance of the license by the Planning Official.

3:3.9 Mini-Warehouses

Due to the need to better integrate mini-warehouses into the urban fabric of the community, the following standards shall be observed:
A. Mini-warehousing sites shall not exceed four (4) acres.
B. Lot coverage of all structures shall be limited to fifty (50) percent of the total area.
C. Vehicular ingress-egress shall be limited to one point for each side of property abutting any street lot line.
D. No business or residential activities other than storage units shall be conducted within or from the units.
E. The storage space or gross floor area of a single unit shall not exceed 300 square feet.
F. Four parking spaces shall be provided in the vicinity of the leasing office to include one handicapped accessible space. Drive aisles adjacent to all exterior storage unit doors shall be a minimum of twenty-seven (27) feet wide.

3:3.10 Open Storage Areas

Open storage as an accessory use where allowed as a conditional use by this Ordinance may be permitted provided such storage area does not occupy over twenty (20) percent of the buildable area, is not located in any required setback area, and is relatively obscured from public view by screening or placement on the lot.

3:3.11 Wrecking, Scrap, and Salvage Operations

The location of these uses, where conditionally permitted by Table 3-3, shall be regulated by the following:
A. No such use shall be located closer than 500 feet to the property line of a lot with any residential use, church, school, historical place, or public park.
B. No material that is discarded and incapable of being reused in some form shall be placed in open storage. All discarded waste material shall be properly recycled or disposed.
C. No material shall be placed in open storage in such a manner that it is capable of being transferred out by wind, water, or other causes.
D. All paper, rags, cloth, other fibers, and activities involving the same, other than loading and unloading, shall be within fully enclosed buildings.

E. All materials and activities not within fully enclosed buildings shall be enclosed by an opaque fence, wall, or vegetative material at least eight (8) feet in height, excluding points of ingress or egress.

3:3.12 Communication Towers and Antennas

Where conditionally permitted by Table 3-3 of the Kershaw County Unified Code of Zoning and Land Development Regulations (ZLDR), communication towers and antennas shall adhere to the following regulations:

A. All new towers shall be designed to accommodate additional antennas equal in number to the applicant's present and future requirements.
B. All applicable safety code requirements shall be met.
C. The tower or antenna shall not be painted or illuminated unless otherwise required by State or Federal regulations. Furthermore, at night, the warning lights on the tower shall be red (not white).
D. No tower or antenna shall be located within 1,500 feet of an existing tower or antenna.
E. Towers or antennas (towers) shall be exempt from the maximum height requirements of this Ordinance, except when adjacent to a residential zone or use, a freestanding tower must be separated from any such residential property line and/or use or a public road by a distance equal to one (1) foot for each one (1) foot in height, except where the adjoining property owner or owners grant an easement to be recorded in the office of the Register of Deeds to allow the fall zone to occur within the adjoining owner’s property so long as no structure is in the fall zone easement area. Towers and antennas located within the Airport Overlay District are subject to maximum structure elevations calculated for the proposed location.
F. Permit requirements for the erection or placement of a tower or antenna shall be accompanied by the following:
    1. A processing fee as set by County Council.
    2. One copy of typical specifications for proposed structures and antennae, including description of design characteristics and material.
    3. A site plan drawn to scale showing property boundaries, tower location, tower height, guy wires and anchors, existing structures, photographs or elevation drawings depicting typical design of proposed structures, parking, fences, landscape plan, and existing land uses, tax map numbers, and property owner names on adjacent property (Site plan not required if antenna is to be mounted on an approved existing structure.).
    4. A current map or update of an existing map on file showing locations of applicant's antenna, facilities, existing towers, and proposed towers which are reflected in public records serving any property in Kershaw County.
    5. A report from a structural engineer registered in South Carolina showing the tower antenna capacity by type and number, and a certification that the tower is designed to withstand winds in accordance with ANSI/EIA/TIA 222 (latest revision) standards.
    6. Identification of the owners of all antennae and equipment to be located on the site.
    7. Written authorization from the site owner for the application.
    8. Evidence that a valid FCC license for the proposed activity has been issued.
    9. A line of sight analysis showing the potential visual and aesthetic impact on residences. Towers shall be located to minimize visual and aesthetic impact on residences.
    10. A written agreement to remove the tower and/or antenna within 180 days after cessation of use.

11. Applicant must show by certificate from a registered engineer that the proposed facility will contain only equipment meeting FCC rules, and must file a written indemnification of Kershaw County Government and proof of liability insurance or financial ability to respond to claims up to $1,000,000 in the aggregate which may arise from operation of the facility during its life, at no cost to Kershaw County, in form approved by the County Attorney.
12. The applicant shall supply a list of all properties containing legally existing habitable dwellings located within the Tower Notification Zone of the proposed tower or antenna, their tax map numbers, property owner names, and current mailing addresses.
13. Applicant will supply additional information to determine if other zoning requirements are satisfied.

G. Once the communication tower or antenna application is approved by the Planning Official, the Planning Official shall notify, by registered mail, all owners of property containing legally existing habitable dwellings located within the Tower Notification Zone of the proposed tower or antenna. Such property owners shall be given thirty (30) days in which to file, to the Planning Official, an objection to construction of the proposed tower. In the event that an objection is filed, the applicant may then apply to the Board of Zoning Appeals for a Special Exception one calendar month before the Board's regularly scheduled meeting. The Board shall act on Special Exception requests regarding communication towers and antennas within 60 days of the date of application submittal. Notice of the hearing shall be published at least fifteen (15) days prior to the hearing in a newspaper of general circulation in the community, as well as due notice to the parties of interest. When approving a Special Exception request for a communications tower or antenna, the Board of Zoning Appeals may approve a Special Exception only when all of the following criteria are met:

1. The use meets all of the required communication tower and antenna regulations as outlined in Article Three (3) of this Ordinance.
2. The use is appropriately located with respect to transportation facilities, water supply, fire and police protection, waste disposal, and similar services.
3. The use will not violate neighborhood character nor adversely affect surrounding land uses.
4. The specific proposed location is crucial to the provider's network.
5. The tower is necessary because co-location space on another tower is unavailable or the location is incompatible with the provider's network needs.

Upon approval of the permit, the Board may attach any specific conditions such as time limitations or requirements that certain conditions to be met before use can commence. The reasons for the Board's decision and any conditions attached to the approval shall be entered in the minutes of the meeting.

H. Permit application for the co-location of an antenna on an existing tower shall be accompanied by the following:

1. A processing fee as set by County Council.
2. One copy of typical specifications for proposed antennae, including description of design characteristics and material.
3. A current map or update of an existing map on file, showing locations of applicant's antenna, facilities, existing towers, and proposed towers which are reflected in public records serving any property.
4. Identification of the owners of all antennae and equipment to be located on the site.

5. Written authorization from the site owner for the application.
6. Evidence that a valid FCC license for the proposed activity has been issued.
7. A written agreement to remove the antenna within 180 days after cessation of use.
8. Applicant must show by certificate from a registered engineer that the proposed facility will contain only equipment meeting FCC rules, and must file a written indemnification of Kershaw County government and proof of liability insurance or financial ability to respond to claims up to $1,000,000 in the aggregate which may arise from operation of the facility during its life, at no cost to Kershaw County, in form approved by the County Attorney.
9. Applicant will supply additional information to determine if other zoning requirements are satisfied.

3:3.13 Rural and B-3 Business Uses

Certain limited small scale business uses are conditionally allowed in RD-1, RD-2, MRD-1, and/or B-3 districts as listed on Table 3-3. Where conditionally permitted these businesses:

A. Shall not exceed 3,000 square feet gross floor area.
B. Establishments engaged in the retail sale of alcoholic beverages shall not permit on-premise consumption.
C. No uncovered open storage or keeping of materials not associated with the principal use shall be permitted in public view.

3:3.14 Agricultural Facilities

Effective June 30, 2006 in zoning districts where agricultural facilities are a permitted or conditionally permitted use, regulations governing the use and operations of such facilities, including setbacks, are governed by the SC *Right to Farm Act, Nuisance Suites Related to Agricultural Operations*, SC 46-45-10 through 80 and SCDHEC regulations adopted pursuant to the *Act*. New swine operations and new slaughterhouse operations are excluded from the definition of agricultural facility.

3:3.14-1 Agricultural Facility as Defined by SC Code of Laws, Section 46-45-20

A. For purposes of this section, *agricultural facility* includes but is not limited to any land, building, structure, pond, impoundment, appurtenance, machinery, or equipment which is used for the commercial production or processing of crops, trees, livestock, animals, poultry, honeybees, honeybee products, livestock products, poultry products, or products which are used in commercial aquaculture.
B. For purposes of this section, *agricultural operation* means:
   1. The plowing, tilling, or preparation of soil at the agricultural facility;
   2. the planting, growing, fertilizing, or harvesting of crops, ornamental horticulture, floriculture, and turf grasses;
   3. the application of pesticides, herbicides, or other chemicals, compounds, or substances to crops, weeds, or soil in connection with the production of crops, livestock, animals, or poultry;
   4. the breeding, hatching, raising, producing, feeding, keeping, slaughtering, or processing of livestock, hogs, aquatic animals, equines, chickens, turkeys, poultry, or other fowl

normally raised for food, mules, cattle, sheep, goats, rabbits, or similar farm animals for commercial purposes;

5. the production and keeping of the honeybees, the production of honeybee products, and honeybee processing facilities;
6. the production, processing, or packaging of eggs or egg products;
7. the manufacturing of feed for poultry or livestock;
8. the rotation of crops;
9. commercial aquaculture;
10. the application of existing, changed, or new technology, practices, processes, or procedures to an agricultural operation;
11. the operation of a roadside market; and
12. silviculture.

C. For purposes of this section, *new swine operations* means porcine production operations not in existence on June 30, 2006.

D. For purposes of this section, *new slaughterhouse operations* means agricultural operations that:
   1. are established after this Ordinance's effective date; and
   2. slaughter or process more than two hundred million pounds of livestock, hogs, aquatic animals, equine, chickens, turkeys, poultry, or other fowl normally raised for food, mules, cattle, sheep, goats, rabbits, or similar farm animals for commercial purposes; and
   3. a new slaughterhouse operation does not include a slaughterhouse located within the corporate limits of a city that relocates within that same county.

3:3.14-2 Conditional Uses for Swine Operations

Swine operations shall be contingent on the applicant receiving all State and Federal permits and compliance with the supplemental regulations of this section where conditionally permitted by this Ordinance.

Swine operations include swine confined animal feeding operations (CAFOs) and swine farming operations.

A CAFO is an agricultural facility where animals are confined and fed or maintained for a total of forty-five days (45) or more in a twelve (12) month period, and crops, vegetated forage growth, or post-harvest residues are not sustained in the normal growing season over any portion of the lot or facility. Structures used for the storage of animal waste from animals in the operation also are part of the concentrated feeding operation.

Swine operations established after the effective date of this Ordinance shall be located no closer than 750 feet of any pre-existing adjoining property line, 1,500 feet of any pre-existing residence, or 3,960 feet (three quarters of a mile) of a pre-existing religious institution, school, public park or recreation facility, industrial park, or building used as a business, unless the titleholder of the adjoining land executes a waiver with the titleholder of the land where the CAFO or farming operation is established or proposed to be established under terms and conditions that the parties negotiate.

A waiver shall be executed by the adjacent/adjoining property owner(s) which grants permission to locate a CAFO closer than 1,500 feet to a pre-existing residence, or closer than 3,960 feet (three quarters of a mile) to a pre-existing church or religious institution, public or private school or educational facility, public park or recreation facility, industrial park, or any building used as a

business, professional office, or public use; or grants permission to locate closer than 750 feet from any pre-existing property line. Said zoning use waiver must contain a description of which portion of the adjacent property is subject to the waiver and a derivation. The waiver shall be witnessed by two persons and filed in the office of Planning and Zoning.

Lagoon or waste storage ponds used in conjunction with all swine operations shall be provided with a 200-foot vegetated buffer strip on all sides. The buffer shall not contain any water body, water source, or wetland. No portion of any swine facility shall be located in the 100 year floodplain.

Non-Conforming Swine CAFOs and farming operations in existence prior to the effective date of this Ordinance are subject to the non-conforming provisions of this Ordinance

3:3.15 Vendors and Seasonal Roadside Stands

3:3.15-1 Vendors

The word, vendor, whenever used in this section, means any person who sells or solicits sales of food, drink, or other merchandise from a self-contained pushcart, self-contained trailer, self-contained bicycle cart, or other self-contained cart, self-contained operable motor vehicle, self-contained wagon, self-contained sled, or self-contained carriage propelled by human, animal, or mechanical power.

Vendors, where permitted by the zoning district regulations of Kershaw County Unified Code of Zoning and Land Development Regulations (ZLDR), shall be governed by the following:

A. All vending operations must be located on property on which there is at least one existing permitted primary use. Under no circumstances shall a vendor be permitted to operate on property that is uninhabited or vacant,
B. Merchandise shall not be removed from the self-contained pushcart, self-contained trailer, self-contained bicycle cart, or other self-contained cart, self-contained operable motor vehicle, self-contained wagon, self-contained sled, or self-contained carriage for display or sale.
C. All vending operations shall be located not less than twenty (20) feet from the nearest street right-of-way, sidewalk, or other public property and shall provide at least two (2) off-street parking spaces.
D. Only one (1) vendor shall be allowed for each 100 feet of street frontage.
E. No portion of a vending operation shall be allowed to occupy or obstruct access to any required off-street parking stall.
F. No merchandise, vehicles, structures, signage, etc. shall be left on the site past sundown.
G. No goods or merchandise offered for sale may be stored in or sold from a tractor-trailer.
H. Vendors must obtain and carry at all times notarized written permission to conduct business per item A-G above from the property owner on which the vendor operation is located.
I. The vendor must obtain and carry at all times a notarized written agreement for use of toilet facilities located within 200 feet of the vendor operation.
J. The vendor must obtain and carry at all times any applicable State (SCDHEC) food handler and/or other applicable health safety license.

3:3.15-2 Seasonal Roadside Stands

The term seasonal roadside stand, whenever used in this section, means any trailer, tent, non-operable motor vehicle, or other facility or structure, not erected on a foundation that is erected

and operated for the sale or solicitation of seasonal sale of agricultural products, fireworks, or other products not customarily sold on a year-round basis.

Seasonable Roadside Stands, where permitted by the zoning district regulations of this Ordinance, shall be governed by the following:

A. **Seasonal Roadside Markets (Agricultural Facilities)** - Effective June 30, 2006 in zoning districts where agricultural facilities, including roadside markets, are a permitted or conditionally permitted use, regulations governing the use and operations of such facilities, including setbacks, are governed by the *SC Right to Farm Act, Nuisance Suites Related to Agricultural Operations*, SC 46-45-10 through 80 and SCDHEC regulations adopted pursuant to the *Act*. Refer to the Agricultural Facilities section in this Article.

B. **Seasonal Roadside Stands Other Than Roadside Markets**
   1. All seasonal roadside stand operations shall be located not less than twenty (20) feet from the nearest street right-of-way, sidewalk, or other public property, and shall provide at least two (2) off-street parking spaces.
   2. Only one (1) seasonal roadside stand shall be allowed for each 100 feet of street frontage.
   3. No portion of a seasonal roadside stand operation shall be allowed to occupy or obstruct access to any required off-street parking stall.
   4. All seasonal roadside stands shall be portable. At the conclusion of seasonal sale, stands shall be stored off-site or within the rear building setback area of the lot.
   5. No goods or merchandise offered for sale may be stored in or sold from a tractor-trailer.
   6. Seasonal roadside stand operators must obtain and carry at all times notarized written permission to conduct business per items 1-5 above from the property owner on which the seasonal roadside stand operation is located.
   7. The operator must obtain and carry at all times a notarized written agreement for use of toilet facilities located within 200 feet of the stand operation.
   8. Seasonal roadside stand operators must obtain and carry at all times any applicable State (SCDHEC) food handler and/or other applicable health safety license.
   9. Firework stand operators must obtain and carry at all times a license from the SC Department of Labor, Licensing, and Regulation (LLR) Board of Pyrotechnic Safety and the approved LLR checklist completed by the Kershaw County Fire Marshall and Sheriff's Department.

3:3.16 Patio and Zero Lot Line Housing

Due to the unique design features of patio and zero lot line housing, the dimensional requirements of Table 3-4 and Table 3-5 are hereby waived and the following requirements are imposed on all such projects:

A. The minimum lot size for such projects shall be one and one-half (1½) acres.
B. Minimum lot area shall be 3,000 square feet per unit, on average.
C. Minimum lot width shall be forty (40) feet.
D. Maximum height of buildings shall not exceed thirty-five (35) feet.
E. The side yard of the project's exterior units shall be a minimum of five (5) feet from the "outside" property line.
F. Project interior side yard setbacks shall be five (5) feet, or a five (5) foot minimum maintenance easement shall be provided between each interior property side yard.

1. Property for such easement may be shared between two (2) properties. Example: The property line is the center line of the easement with each property contributing two and one-half (2½) feet towards the easement. In this example, building setbacks will be a minimum of two and one-half (2½) feet from the property line.
2. The five (5) foot minimum maintenance easement may be contained wholly on one property. In this example, the side yard setback for that property shall be five (5) feet and setback for the adjoining property shall be zero (0).

G. Rear yard setbacks shall be not less than ten (10) feet.

3:3.17 Townhouses

Due to the unique design features of townhouses, the dimensional requirements of Table 3-4 and Table 3-5 are hereby waived, and the following design requirements are imposed for all such projects:

A. The minimum lot size for such projects shall be a minimum of one-half (½) acre.
B. Not more than eight (8) or fewer than two (2) townhouses may be joined together, with approximately the same (but staggered) front line.
C. Side yard setbacks at the end unit shall be as required for the district in which the project is to be located, with not less than a twenty (20) foot distance between groups of adjoined buildings in the project area.
D. Rear yard setbacks shall be a minimum of twenty (20) feet.
E. Minimum lot width shall be eighteen (18) feet.
F. Sidewalks not less than three (3) feet in width shall be provided along the front property line of each project and building.
G. Maximum height of buildings shall not exceed thirty-five (35) feet.
H. Front yard setbacks shall be as prescribed by Table 3-4 and Table 3-5, but may be waived or modified by the Board of Zoning Appeals due to the unique style of such housing.
I. Rear yards shall be enclosed by a minimum six (6) foot wall or fence. If the rear yard is used for parking, wall or fence configurations may be modified to accommodate access to the parking area. All fences and walls must have a finished side that is facing the adjoining property. The interior side of the fence or wall may be finished as owner deems appropriate. Walls may be brick or masonry. Plain concrete block must be rendered with decorative facing such as stucco, brick veneer, etc. Wood stockade fences (with spaces between the stakes) and unpainted fences are not allowed. Chain link, wire, or other fences that do not create a visible barrier are not allowed.
J. Rear yards may include one (1) accessory building no greater than 500 square feet in gross floor area.

3:3.18 Manufacturing Facilities

The following performance standards shall be used to ensure that all conditionally permitted manufacturing uses shall produce no injurious or obnoxious conditions related to the operation of such uses sufficient to create a nuisance beyond the premises. The Planning and Zoning Commission or the Planning Official, as applicable, may require additional restrictions based on proximity to schools, churches, residential areas, etc. Furthermore, the Planning and Zoning Commission may require that an engineer certify that the proposed project will not violate the restrictions listed herein.

3:3.18-1 Vibration

No vibration shall be produced which is transmitted through the ground and is discernible without the aid of instruments at any point beyond the lot line; nor shall any vibration produced exceed the following velocity levels, measured with a vibration monitor in inches per second at the nearest:

A. Residential property line: 0.02
B. Non-residential property line: 0.10

3:3.18-2 Fire and Explosives

All activities and all storage of flammable and explosive materials shall be provided with adequate safety devices against the hazards of fire and explosion, including adequate fire fighting and fire suppression equipment, as prescribed in the applicable building codes.

3:3.18-3 Noise

All noise shall be muffled so as not to be objectionable due to intermittence, beat frequency, or shrillness. In no event shall the sound pressure level of noise radiated continuously from a facility exceed at the lot line the values given in the night time and day time schedules below in any octave band or frequency. Sound pressure level shall be measured with a sound level meter and an octave band analyzer that conforms to American National Standards Institute (ANSI) type 2 standards.

A. **Night Time Schedule**
   Maximum permissible sound pressure levels at the lot line for noise radiated continuously from a facility between the hours of 9 p.m. and 7 a.m.:

Table 3-7 MAXIMUM CONTINUOUS SOUND PRESSURE LEVELS - NIGHT TIME

Frequency Band (In Cycles per Second)	Sound Pressure Levels (In Decibels)	
	At Non-Residential Lot Line	At Residential Lot Line
20-75	69	65
76-150	60	50
151-300	56	43
301-600	51	38
601-1,200	42	33
1,201-2,400	40	30
2,401-4,800	38	28
4,801-10,000	35	20

B. **Day Time Schedule**

Maximum permissible sound pressure levels at the lot line for noise radiated from a facility between the hours of 7 a.m. and 9 p.m. shall not exceed the limits of the preceding table except as specified and corrected below:

Table 3-8 MAXIMUM SOUND PRESSURE LEVEL EXCEPTIONS - DAY TIME	
Type of Operation in Character of Noise	**Correction in Decibel***
Day time operation only	plus 5
Noise source operates less than 20% of any one-hour period	plus 5
Noise source operates less than 5% of any one-hour period	plus 10
Noise source operates less than 1% of any one-hour period	plus 15
Noise of impulsive character (hammering, etc.)	minus 5
Noise of periodic character (hum, speech, etc.)	minus 5
* Applicable only if these corrections may be applied to the preceding table.	

Noises emanating from construction activities between 7:00 a.m. and 9:00 p.m. shall be exempt from these requirements. Vibration emanating from construction activities between 7:00 a.m. and 9:00 p.m. shall be exempt from these regulations.

3:3.18-4 Air Pollution

The emission of visible smoke, dust, dirt, fly ash, particulate matter from any pipes, vents, or other openings, or from any other source into the air, shall comply with the regulations of the South Carolina Department of Health and Environmental Control (SCDHEC) and the SCDHEC Air Operating Permit. Air pollution emanating from construction activities shall be governed by the SCDHEC Air Construction Permit.

3:3.18-5 Odor

There shall be no emission of odorous gases or other odorous matter in such quantities as to be offensive at the property line. Any process which may involve the creation or emission of any such odor shall be provided with both a primary and a secondary safeguard system so that control may be maintained in the event of failure of the primary safeguard system.

3:3.18-6 Glare

There shall be no direct or sky reflected glare, whether from floodlights, high temperature processing, combustion, welding, or otherwise, so as to be visible in any residence.

3:3.18-7 Fumes and Vapors

There shall be no emission of any fumes or vapors of a noxious, toxic, or corrosive nature which can cause damage or irritation to health, animals, vegetation, or to any form of property.

3:3.18-8 Heat, Cold, Dampness, or Movement of Air

Activities which could produce any adverse effect on the temperature, motion, or humidity of the atmosphere beyond the lot line shall not be permitted.

3:3.18-9 Toxic Matter

The measurement of toxic matter shall be at ground level or habitable elevation, and shall be the average of any twenty-four (24) hour sampling period. The release of any airborne toxic matter shall not exceed the quantities permitted for those toxic materials currently listed in *Threshold*

Limit Values as published by SCDHEC. If a toxic substance is not contained in said listing, the applicant shall satisfy the Planning Official that the proposed levels will be safe to the general population.

3:3.18-10 Exterior Illumination

All operations, activities, and uses shall be conducted so as to comply with the performance standards governing exterior illumination prescribed below.

In general, the pattern of light pooling from each light source shall be carefully considered to avoid throwing light onto adjacent properties. Light sources visible in residential or medical areas shall comply with light intensities indicated in Column A, below. Light sources visible in commercial or industrial areas shall comply with light intensities indicated in Column B below.

Table 3-9 MAXIMUM INTENSITY FOR EXTERIOR LIGHTING

	Column A	**Column B**
Bare Incandescent Bulbs	5 watts	40 watts
Illuminated Buildings	15 ft. candles	30 ft. candles
Internally Illuminated Signs	150 ft. lamberts	250 ft. lamberts
Externally Illuminated Signs	25 ft. candles	110 ft. candles
Any Other Unshielded Sources, Intrinsic Brightness	50 candela per square centimeter	50 candela per square centimeter

Illumination shall be measured from any point outside the property. Measurements are to be conducted by Illumination Engineering Society of North America (IESNA) standards.

3:3.18-11 Compliance Guarantee

The applicant of a permit for a manufacturing or processing plant which would produce any of the above "objectionable elements" shall acknowledge in writing his understanding of the performance standards applicable to the proposed use, and shall submit with the permit application, an agreement to conform with such standards at all times. Any violation of the agreement shall constitute a violation of this Ordinance and shall be treated accordingly.

3:3.19 Construction and Demolition Landfills

Where conditionally permitted by this Ordinance and consistent with the most current Kershaw County Solid Waste Management Plan, construction and demolition landfills shall meet the following conditions:

A. A construction and demolition landfill, as defined by Section 44-96-40 of the SC Code of Laws, 1976, as amended, may be located up to, but not closer than 300 feet from any property line.
B. No material shall be placed in open storage in such a manner that it is capable of being transferred out by wind, water, or other causes.
C. All materials and activities shall be screened in such fashion as not to be visible from off-site. The provisions of this subsection may be waived by the Planning Official when such facility will be utilized for a period not to exceed ninety (90) days.
D. A plan showing restoration of the site upon completion of use as a landfill shall accompany the request.

E. Not less than two (2) down gradient water monitoring wells and one (1) up gradient well shall be installed and monitored. Said wells shall be installed and tested at installation and tested thereafter annually as more particularly set forth in SCDHEC regulations.
F. Such site shall meet all current SCDHEC permit requirements and regulations.

3:3.20 Municipal Solid Waste Landfills

Where conditionally permitted by this Ordinance and consistent with the most current Kershaw County Solid Waste Management Plan, municipal solid waste landfills shall meet the following conditions:

A. Municipal solid waste landfills, as defined by Section 44-96-40 of the SC Code of Laws, 1976, as amended, shall be located no closer than 1,000 feet to any existing residential, recreational, religious, educational, medical, or public use (measured in a straight line).
B. A geotechnical engineering firm approved by the Planning Official shall render a written opinion that, to the best professional judgment, the formations being used to contain the waste are impermeable by State standards and that surrounding ground water sources will not be contaminated.
C. The facility shall be fully screened in accord with the buffering and screening requirements of this Ordinance. A minimum six (6) foot high opaque cyclone fence shall be installed along any remaining property boundaries not requiring buffers or screening.
D. A plan showing restoration of the site upon completion of use as a landfill shall accompany the request.
E. Such site shall meet all current SCDHEC permit requirements and regulations.

3:3.21 Sexually Oriented Businesses

3:3.21-1 Sexually Oriented Business

For purposes of this Ordinance, sexually oriented business operations shall mean and include the following:

A. **Adult Arcade** means any place to which the public is permitted or invited wherein coin-operated or slug-operated or electronically, electrically, or mechanically controlled still or motion picture machines, projectors, or other image-producing devices are maintained to show images to five (5) or fewer persons per machine at any one time, and where the images so displayed are distinguished or characterized by the depicting or describing of "specified sexual activities" or "specified anatomical areas."
B. **Adult Bookstore or Adult Video Store** means a commercial establishment, which, as one of its principal business purposes, offers for sale or rental for any form of consideration any one or more of the following:
    1. Books, magazines, periodicals, or other printed matter, or photographs, films, motion pictures, video cassettes, digital video discs, or video reproductions, slides or other visual representations which depict or describe "specified sexual activities" or "specified anatomical areas," or;
    2. instruments, devices, or paraphernalia, which are designed for use in connection with "specified sexual activities." A commercial establishment may have other principal business purposes that do not involve the offering for sale or rental of material depicting or describing "specified sexual activities" or "specified anatomical areas" and still be categorized as an adult bookstore or adult video store. Such other business purposes will

not serve to exempt such commercial establishment from being categorized as an adult bookstore or adult video store so long as: One (1) of its principal business purposes is the offering for sale or rental for consideration the specified materials which depict or describe "specified sexual activities" or "specified anatomical areas."

C. **Adult Cabaret** means a nightclub, bar, restaurant, or similar commercial establishment which regularly features:
   1. Persons who appear in a state of nudity; or
   2. live performances which are characterized by the exposure of "specified anatomical areas" or by "specified sexual activities," or
   3. films, motion pictures, videocassettes, digital video discs, slides, or other photographic reproductions, which are characterized by the description of "specified sexual activities" or "specified anatomical areas."

D. **Adult Motel** means a hotel, motel, or similar commercial establishment which:
   1. Offers accommodations to the public for any form of consideration; provides patrons with closed-circuit television transmissions, films, motion pictures, video cassettes, digital video discs, slides, or other photographic reproductions which are characterized by the depiction or description of "specified sexual activities" or "specified anatomical areas," and has a sign visible from the public right-of-way which advertises the availability of this adult-type of photographic reproductions; or
   2. offers a sleeping room for rent for a period of time that is less than ten (10) hours; or
   3. allows a tenant or occupant of a sleeping room to sub-rent the room for a period of time that is less than ten (10) hours.

E. **Adult Motion Picture Theater** means a commercial establishment where, for any form of consideration, films, motion pictures, video cassettes, digital video discs, slides, or similar photographic reproductions are regularly shown which are characterized by the depiction or description of "specified sexual activities" or "specified anatomical areas."

F. **Adult Theater** means a theater, concert hall, auditorium, or similar commercial establishment which regularly features persons who appear in a state of nudity or live performances which are characterized by the exposure of "specified anatomical areas" or by "specified sexual activities."

G. **Sexual Encounter Center** means a business or commercial enterprise that, as one of its primary business purposes, offers for any form of consideration:
   1. Physical contact in the form of wrestling or tumbling between persons of the opposite sex; or
   2. activities between male and female persons and/or persons of the same sex when one or more of the persons is in a state of nudity or semi-nudity.

3:3.21-2 Definitions of Specified Anatomical Areas and Specified Sexual Activities

A. **Specified Anatomical Areas** means the male or female genitals including the vulva or more intimate parts of the female genitals, or bare human buttocks, anus, or the areola or nipple of the female breast.

B. **Specified Sexual Activities** means and includes any of the following:
   1. The fondling or other erotic touching of human genitals, pubic region, buttocks, anus, or female breast.
   2. Sex acts, normal or perverted, actual or simulated including intercourse, oral copulation, or sodomy.
   3. Masturbation, actual or simulated.

4. Excretory functions as a part of or in conjunction with any of the activities set forth in A through C above.

3:3.21-3 Location

Owing to potentially objectionable operational characteristics of sexually oriented or adult uses, and the deleterious effect of such uses on existing businesses and/or residential areas around them, the location of such uses where permitted by Table 3-3, shall be tempered by the supplemental siting criteria of this section.

No such use shall be located within 2,000 feet (measured in a straight line) of:

A. A residence or a residential zone;
B. a church or religious institution;
C. public or private schools and educational facilities;
D. public parks and recreational facilities;
E. U. S. Highways 1, 601 and 521, SC Highways 34 and 97, Springdale Drive, Interstate 20; or
F. any other adult or sexually oriented business. In addition, no more than one sexually oriented business shall be allowed in the same building.

3:3.21-4 Operation Requirements

It shall be a violation of this Ordinance for a person to operate a sexually oriented business without having first received a use permit as required by this Ordinance.

3:3.21-5 Inspection

A. The operator of a sexually oriented business shall permit representatives of the Planning and Zoning Department, police, sheriff's, health, or fire department, or other governmental department or agency involved in code enforcement to inspect the premises from time to time for the purpose of ensuring compliance with the law.
B. The operator commits a misdemeanor if he refuses to permit such lawful inspection of the premises.

3:3.21-6 Revocation

The Planning Official may revoke the use permit and declare the operator in violation of the requirements of this Ordinance if he determines that:

A. The operator has knowingly allowed possession, use, or sale of controlled substances on the premises.
B. The operator has knowingly allowed prostitution on the premises.
C. The operator has knowingly allowed any act of sexual intercourse, sodomy, oral copulation, masturbation, or other sexual conduct to occur in or on the permitted premises.

3:3.22 Animal Spectator Events in Rural Zoning Districts

3:3.22-1 Animal Spectator Events

Animal spectator events are events which include horse parks and equestrian event facilities, rodeos, bull riding, and other commercial animal riding events. Facilities for animal spectator events in the rural zoning districts must comply with the following requirements:

A. Spectator capacity shall be limited to 100 people.
B. Events shall be limited to a maximum of four (4) days per month.
C. Loudspeakers shall not be used after sunset.

D. The facility shall be vacated no later than one hour after sunset.
E. A perimeter buffer for non-residential uses per the provisions of this Ordinance shall be required along the property line to shield residences from parking areas, stockyards, barns, restrooms, concession stands, truck unloading areas, and other similar uses.
F. All portions of the property must be designed and maintained to allow drainage to flow off active use areas so as to prevent ponding and propagation of insects or pollution of adjacent streams. SCDHEC permitting requirements shall always prevail.
G. The lot must be maintained in a sanitary condition through the use of lime and pesticides.
H. Barns, stables, arenas, and other event facilities must be at least fifty (50) feet from the rear or side property line, at least 500 feet from the nearest adjacent residence, and at least 50 feet from any swimming pool.
I. Manure piles shall be located at least 100 feet from any property line; at least 200 feet from any dwelling, swimming pool, patio, water body, etc. that is located on-site or on an adjacent lot; and shall meet all SCDHEC requirements.
J. Farm equipment may be parked on the property to include transportation equipment when directly utilized as a part of the event.
K. Parking requirements are per individual review. Approval shall be subject to consideration of seating capacity, size of designated parking area, ingress and egress, erosion control, adequate parking areas for animal trailers, and other issues specific to the site and proposed use.
L. Permanent stadium seating is subject to all applicable building permit requirements. Temporary seating for special events must have prior approval from the Planning Official and be removed within 30 days of any special event.
M. Lighting shall be shielded so as to not cause off-site nuisance to residences and/or motorists.
N. Vendors for special events shall meet all vendor conditions of this Article. All food vendors must present proof of SCDHEC approval.
O. Signage shall conform to the sign regulation provisions of this Ordinance.

3:3.23 General Merchandise Auctions in Rural Zoning Districts

A. General merchandise auctions, where permitted as a conditional use in the RD-1, RD-2, and MRD-1 zoning districts, shall meet the following conditions:
B. The number of such events shall be limited to four (4) per calendar week, shall end by 10:00 P.M. The premises shall be vacated by guests and staff by 11:00 P.M. Amplified sound shall cease by 10:00 P.M.
C. Such events shall take place only on properties of at least eight (8) acres. All parking and auction-related activities shall be located a minimum of 200 feet from the front property line, 75 feet from side property lines, and 175 feet from the rear property line.
D. The gross floor area of such activity shall not exceed 3,000 square feet.
E. Permanent restroom facilities, handicapped facilities included, shall be located on the property and available to all guests. The number of restrooms shall be determined by industry standards.
F. There shall be a minimum of one (1) parking space per 75 feet of gross floor area. Parking areas shall meet all parking regulations as outlined in article three this Ordinance unless otherwise approved by the Planning Director. Handicapped spaces shall be paved. There shall be no on-street parking.

G. The business shall be properly licensed and shall not generate any noise, glare, heat, smoke, dust, or odor perceptible to adjacent properties. The pattern of exterior light sources shall be carefully considered to avoid throwing light onto adjacent properties. There shall be no direct or sky reflected glare, whether from floodlights or otherwise, so as to be visible in any residence. Such lighting shall be turned off by 11:00 P.M.
H. No goods or merchandise offered for sale may be sold from a tractor-trailer unless permitted by the Planning Director.
I. Catering and food service facilities shall be DHEC approved. Food vendors must obtain and carry at all times all applicable State (SCDHEC) food handler and/or other health safety licenses.
J. Signage shall conform to the sign regulation provisions of this Ordinance and no sign shall be electronically illuminated.
K. No vehicles, trailers, farm, or construction equipment that is for sale may be left on premises more than twenty-four (24) hours unless authorized by the Planning Official.
L. In order to maintain the character of rural zoning districts, to exclude all visual contact between adjacent properties, to create spatial separation, and to shield adjacent properties from parking areas, concession stands, truck unloading areas, and all other auction-related activities, a continuous Type D buffer per the provisions of this Ordinance shall be installed within seventy-five (75) feet of all auction related activities and parking except that facing the main parking area access road.
M. A Type B street buffer, as required per the regulations of this Ordinance, shall be installed along the street front.
N. The permit for such events shall expire after one (1) year and must be renewed in order to continue. The application process shall include a public comment period of 30 days. A notice of the initial and renewal applications and public comment period shall be published at the applicant's expense in a general circulation newspaper in the community. The notice shall also be sent, at the applicant's expense, by registered mail to adjacent property owners at the beginning of the 30-day comment period. Comments received, complaints filed with the Planning and Zoning Department, and incident reports filed with the Kershaw County Sheriff's Department will be taken into consideration when reviewing and renewing applications.

3:3.24 Motor Vehicle Towing Services in B-2 Zoning Districts

Motor vehicle towing services, where permitted as a conditional use in the B-2 zoning districts, shall meet the following conditions:

A. The site of the towing service shall not be larger than two (2) acres in size.
B. The owner/operator of the business shall hold all required state and local licenses.
C. Vehicular ingress and egress shall be limited to one point for each side of property abutting any street.
D. All vehicles and activities not fully enclosed within buildings shall be enclosed by a permanent opaque privacy fence or wall at least six (6) feet in height, including points of ingress or egress.
E. In general, the pattern of light pooling from each light source shall be carefully considered to avoid throwing light onto adjacent properties. There shall be no direct or sky reflected glare, whether from floodlights, welding, or otherwise, so as to be visible in any residence.

3:3.25 Agricultural Products Auctions in Rural Zoning Districts

3:3.25-1 Agricultural Products Auctions

Agricultural products auctions are events engaged only in the sale of farm animals, items directly related to those animals, and items directly and commonly used in the practice of farming. Facilities for agricultural products auctions in the rural zoning districts must comply with the following requirements:

A. Spectator capacity shall be limited to 200 people.
B. Events shall be limited to Fridays and Saturdays only.
C. Loudspeakers shall not be used after 10:00 P.M.
D. The facility shall be vacated no later than 11:00 P.M.
E. A perimeter buffer for non-residential uses per the provisions of this Ordinance shall be required along the property line to shield residences from parking areas, stockyards, barns, restrooms, concession stands, truck unloading areas, and other similar uses.
F. All portions of the property must be designed and maintained to allow drainage to flow off active use areas so as to prevent ponding and propagation of insects or pollution of adjacent streams. SCDHEC permitting requirements shall always prevail.
G. Two permanent or portable restrooms must be provided for each event. Portable restrooms shall be maintained on a regular basis according to industry standards.
H. The lot must be maintained in a sanitary condition through the use of lime and pesticides.
I. Barns, stables, arenas, permanent or portable restroom facilities, and other event facilities must be at least fifty (50) feet from the rear or side property line, at least 500 feet from the nearest adjacent residence, and at least 50 feet from any swimming pool.
J. Manure piles shall be located at least 500 feet from any property line; at least 500 feet from any dwelling, swimming pool, patio, water body, etc. that is located on-site or on an adjacent lot; and shall meet all SCDHEC requirements.
K. The sale of livestock shall be limited to by the hoof.
L. No animals shall be left on premises overnight.
M. No unsold auction items shall be left on premises overnight.
N. No items purchased at the event may remain onsite longer than forty-eight (48) hours.
O. A maximum of ten (10) vehicles may be sold per day.
P. Farm equipment may be parked on the property to include transportation equipment when directly utilized as a part of the event.
Q. Parking requirements are per individual review. Approval shall be subject to consideration of seating capacity, size of designated parking area, ingress and egress, erosion control, adequate parking areas for animal trailers, and other issues specific to the site and proposed use.
R. Permanent stadium seating is subject to all applicable building permit requirements. Temporary seating for special events must have prior approval from the Planning Official and be removed within 30 days of any special event.
S. Lighting shall be shielded so as to not cause off-site nuisance to residences and/or motorists.
T. No outside vendors shall be permitted.
U. Signage shall conform to the sign regulation provisions of this Ordinance.

3:4 SIGN REGULATIONS

3:4.1 Intent

The intent of this Ordinance is to establish requirements for placement, installation and maintenance of signs in order to preserve and protect the health, safety, welfare, and general well-being of the community's citizens. As regulation of placement, construction, and maintenance of buildings and structures is a valid use of the police power, so too is regulation of placement, installation, and maintenance of signs, since such signs in the literal sense must ordinarily be considered structures, and in a practical sense are capable of producing many of the same nuisances as are produced by buildings.

Regulation of placement, installation, and maintenance of signs is further justified by their purpose which is to draw mental attention to them, potentially to the detriment of sound driving practices and to the safety of the motoring public to which a majority of signs are oriented. Therefore, it is the intent of this Ordinance to regulate the size and location of signs so that their purpose can be served without unduly interfering with motorists and causing unsafe conditions.

It is the objective of this Ordinance to protect and preserve the aesthetic qualities of the community by regulating placement, installation, and maintenance of signs. The fact that such signs are intended to command visual contact grants to business and advertising signs a proportionately greater role than other structures in determining the overall aesthetic quality of the community. The aesthetic impact of business and advertising signs is an economic fact which may bear heavily upon the enjoyment and value of property; therefore the regulation of signs is validly justified on the basis of conserving the value of property and encouraging the most appropriate use of land throughout the County. It is contended that it is not irrational for a community's citizens to plan their physical surroundings in such a way that unsightliness is minimized.

Finally, this Ordinance recognizes the economic benefit of signage to the County's businesses, industries, and institutions and the needs of sign users for adequate identification, communication, and advertising.

3:4.1-1 Applicability and Conformance

This Ordinance regulates the number, size, placement, and physical characteristics of signs; allows certain signs without permits or registration; requires permits or registration for certain signs; and prohibits certain signs. As of the effective date of this Ordinance, no sign may be erected, enlarged, or altered unless it conforms to the requirements of this Ordinance.

3:4.1-2 Definition

This section applies to any sign. A sign is any structure or device designated or intended to convey information to the public in written, pictorial, or symbolic form.

3:4.1-3 Permit or Registration Required

Except as otherwise provided in this Ordinance, it shall be unlawful for any person to erect, construct, alter, move, or replace any sign or cause the same to be done, without first having obtained a sign permit or registration for such sign from the Planning Official as required by this Ordinance. This provision is applicable to a property owner, a property lessee, a sign company,

a contractor, or any other person who erects or causes to have erected a sign requiring a permit or registration. It shall be the responsibility of the person erecting the sign to ensure that any and all required permits or registrations have been obtained prior to erecting the sign.

3:4.2 Signs Requiring a Permit

3:4.2-1 Freestanding Signs (pole signs, ground signs, pylon, and monument signs)

Freestanding signs are any permanently mounted signs that are placed on or anchored in the ground, and that are not attached to a building or other structure. Freestanding signs are permitted as follows:

A. Where allowed and as specified in this section, freestanding signs are permitted where the activity associated with the sign is a permitted or conditionally permitted use under zoning district regulations.
B. One freestanding sign is permitted per street frontage so long as all signs are at least 100 feet apart as measured by the shortest straight line.
C. Maximum sign surface area for single occupancy sites is forty (40) square feet. Maximum sign surface area for multiple occupant sites is fifty (50) square feet.
D. The maximum sign surface square footage for a freestanding sign identifying the name of an industrial park located in an I-1 zoning district is 100 square feet; and the maximum height of such sign is thirty (30) feet. The maximum height of other freestanding identification signs in GD and I-1 zoning districts is fifteen (15) feet; and the maximum height of other freestanding identification signs in all other zoning districts is ten (10) feet. The maximum height of a freestanding sign at a bed and breakfast inn shall be five (5) feet.
E. Where additional height is required to raise the base of the sign to mean elevation (average street level) of the fronting street, the Planning Official may allow heights in excess of fifteen (15) feet in the GD and I-1 zoning districts, and heights in excess of ten (10) feet in all other zoning districts.
F. Such signs shall be set back a minimum of five (5) feet from the front property line in all zoning districts. The side setback shall be a minimum of ten (10) feet from the side property line in all zoning districts. If such sign is located adjacent to a residential use in any zoning district, the side setback shall be a minimum of fifteen (15) feet.
G. Pole signs may only be internally illuminated. Monument (ground) signs may be internally or externally illuminated as specified in the illumination provisions of this section.
H. Changeable copy sign elements shall not be mounted on a separate structure, but must be incorporated into the allowable sign surface area of the permitted freestanding sign.
I. Gasoline pricing signs shall be not be separate sign structures, but shall be incorporated into the allowable sign surface area of the permitted freestanding sign.
J. Freestanding signs are not permitted on undeveloped lots or parcels except for the following: Temporary contractor's, craftsman's, and other signs pertaining to construction; temporary subdivision announcement signs; temporary campaign or election signs; and temporary real estate signs.
K. Off-premise directional signs, not to exceed three (3) feet in height and twelve (12) square feet in sign surface area, are permitted within industrial parks in I-1 zoning districts. Such signs include, but are not limited to directional arrows and messages such as entrance, enter, and exit. Off-premise directional signs shall not display a commercial message.

3:4.2-2 Signs on Building Walls

A building wall sign is any sign attached to a wall, painted on the wall surface, or erected and confined within the limits of an exterior wall of any building or structure which is supported by such wall or building, and which displays only one sign surface. Building wall signs are permitted as follows:

A. For multi-tenant buildings, each tenant is allowed only one (1) of the following per street frontage: wall, awning, or projecting sign.
B. Where allowed and as specified in this section, signs on building walls are permitted on parcels where the activity associated with the sign is a permitted or conditionally permitted use under zoning district regulations.
C. Principal building walls may have signage on all faces which front on a public street.
D. Building wall signs shall reflect the proportional and dimensional relationships of the structure. The ratio of window and door openings to wall surface area must be considered. All building wall signs within a multiple occupant development shall be in proportion and scale to each other.
E. In general, the surface area dimension of building wall signs should not exceed ten (10) square feet per building side which faces a public street unless the size of the building is such that a larger sign can be justified. For multiple occupant buildings, building wall signs shall reflect the proportional and dimensional relationships of the individual store front. For smaller store fronts, the appropriate size may be less than ten (10) square feet, while larger sizes may be appropriate for larger store fronts.
F. No building wall sign shall extend beyond any point of a roofline, parapet, or mansard roof.
G. Such signs shall be located so that they do not block the view of windows or doors and are placed in-between and not overlap vertical architectural elements.
H. Building wall signs may only be internally illuminated as specified in the illumination provisions of these regulations.

3:4.2-3 Hanging Signs

A. Signs hung from porch ceilings and roof overhangs may be substituted for the allowable wall signage per building or unit on parcels where the activity associated with the sign is a permitted or conditionally permitted use under zoning district regulations.
B. One (1) hanging sign per unit per public street frontage is permitted.
C. Hanging signs shall reflect the proportional and dimensional relationships of the structure. All hanging signs within a multiple occupant development shall be in proportion and scale to each other. In general, the surface area dimension of hanging signs should not exceed ten (10) square feet per building side which faces a public street unless the size of the building is such that a larger sign can be justified. For multiple occupant buildings, hanging signs shall reflect the proportional and dimensional relationships of the individual store front. For smaller store fronts, the appropriate size may be less than ten (10) square feet, while larger sizes may be appropriate for larger store fronts.
D. Such signs must be located so that, when viewed at front elevations, they do not block the view of windows or doors and are placed in-between and do not overlap vertical architectural elements.
E. When mounted in a location that is within a pedestrian pathway, hung signs shall maintain a minimum of six feet eight inches (6’8”) clearance between the bottom of the sign and the porch or ground surface.

F. Hanging signs may be internally illuminated as specified in the illumination provisions of these regulations.

3:4.2-4 Projecting Signs (Suspended Signs, Signs over Sidewalks, and Shingles)

A projecting sign is oriented perpendicular to a building or structure and is wholly or partly dependent upon a building for support. Such signs are permitted as follows:

A. A single occupancy building is permitted only one (1) projecting sign per building frontage. For multi-tenant buildings, each tenant is allowed only one (1) of the following per street frontage: wall sign, awning sign, or projecting sign. Multi-tenant buildings in non-residential districts choosing to use projecting signs may erect one (1) projecting sign per tenant, provided that such signs are spaced not closer than twenty (20) feet horizontally from another projecting sign.
B. Where allowed and as specified in this section, projecting signs are permitted where the activity associated with the sign is a permitted or conditionally permitted use under zoning district regulations.
C. Sign surface area of projecting sign shall reflect the proportional and dimensional relationships of the structure. In general, the surface area of projecting signs should not exceed ten (10) square feet unless the size of the building is such that a larger sign can be justified.
D. A minimum eight (8) foot clearance between the bottom of the sign and the sidewalk, pavement, or ground surface shall be maintained.
E. Signs hanging over sidewalks shall not project from the building wall to an extent that they obstruct the view of pedestrians, bicyclists, or motorists, or of street intersections, traffic signs, devices, or signals.
F. Projecting signs may be mounted no higher than the bottom of the second floor sill or no higher than the cornice; whichever is lower.
G. All projecting signs at the intersection of building corners shall intersect at right angles to the building front.
H. Projecting signs may only be internally illuminated as specified in the illumination provisions of these regulations.

3:4.2-5 Signs on Perimeter or Retaining Walls and Fences

The principal identification sign for a location may be located on a wall or a fence. A wall or fence sign is any sign attached to a wall or fence, painted on the wall or fence surface, or erected and confined within the limits of a wall or fence, and displays only one (1) sign surface. Signs on walls and fences are permitted as follows:

A. The wall or fence receiving the sign shall meet zoning district height regulations.
B. Where allowed and as specified in this section, such signs are permitted where the activity associated with the sign is a permitted or conditionally permitted use under zoning district regulations.
C. When using one (1) single sign, the sign surface area shall not exceed twenty (20) square feet, and the sign height shall not exceed four (4) feet. When using two (2) identical signs placed symmetrically on each side of an entry road of the location being advertised, the sign surface area of each shall not exceed sixteen (16) square feet, and the height of each sign shall not exceed four (4) feet. If property has more than one (1) street frontage, another

single or matching pair of such signs may be located on each street frontage, provided the locations are at least 100 feet apart as measured by a straight line.

D. Signs on fences and walls may be externally or internally illuminated as specified in the illumination provisions of these regulations.

3:4.2-6 Signs on Awnings, Canopies, and Marquees

For the purposes of this Ordinance, an awning, canopy, and marquee shall be defined as follows:

Awning - An architectural projection or shelter projecting from and supported by the exterior wall of a building and composed of a rigid or non-rigid materials and/or fabric on a supporting framework that may be either permanent or retractable. Example: A canvas covered frame extending from a building wall to an area over the sidewalk in front of a shop.

Canopy - A freestanding open-sided structure constructed of rigid materials or non-rigid materials, including but not limited to, metal, wood, concrete, plastic, canvas, or glass. The structure covering the fueling area at a gas station is considered to be a canopy. Other examples include picnic shelters, gazebos, and cabanas.

Marquee - A fixed hood of permanent construction which is supported solely from a building wall, and extends beyond the building. Example: The structure over the front sidewalk area at a movie theatre.

Signs on awnings, canopies, and marquees are permitted as follows:

A. For multi-tenant buildings, each tenant is allowed only one (1) of the following per street frontage: wall sign, awning sign, or projecting sign.
B. Awnings, canopies, and marquees may have signage on all faces which front on a public street.
C. Where allowed and as specified in this section, canopy and awning signs are permitted where the activity associated with the sign is a permitted or conditionally permitted use under zoning district regulations. Marquee signs are allowed in the B-2, GD, and I-1 zoning districts only.
D. Any sign affixed to an awning, canopy, or marquee that is not flush with or integral to the awning, canopy, or marquee is prohibited. Awnings, canopies, and marquees may not have signage projecting beyond, below, or above the structure.
E. The sign surface area shall reflect the proportional and dimensional relationships of the surface area of the portion of the awning, canopy, or marquee visible from the street level, not to exceed twenty (20) percent of the surface area of the awning, canopy, or marquee to which the sign is attached.
F. Awning, canopy, and marquee signs may be mounted no higher than the bottom of the second floor sill or no higher than the cornice; whichever is lower.
G. A minimum eight (8) foot clearance shall be maintained between the bottom edge of an awning, canopy, or marquee and the sidewalk, pavement, or ground surface.
H. Awning or marquee shall project no closer than eight (8) feet from the street curb.
I. Awnings shall not be illuminated. Canopies and marquees may only be illuminated internally as specified in the illumination provisions of these regulations.

3:4.2-7 Changeable Copy Signs

Changeable copy signs are signs or portions thereof with characters, letters, or illustrations that can be changed or rearranged by any means (manual, electronic, atmospheric, mechanical,

remote, etc.) without altering the face or surface of the sign. For the purposes of this Ordinance, a sign on which the message or image changes more often than once every fifteen (15) seconds shall be considered an animated sign and is not allowable. Changeable copy signs are permitted as follows:

A. Changeable copy is permitted only on permanent principal freestanding signs and marquees, and shall comply with all of the regulations of freestanding and marquee signs as applicable, and as outlined in the Signs Requiring a Permit provisions in this section.
B. Sign copy or image shall maintain a static message or image for at least fifteen (15) seconds.
C. The actual change between sign message and/or image shall be instantaneous.
D. Changeable copy signs shall not employ motion or the illusion of motion by any means to depict action or create a special effect or scene.
E. Such signs are not permitted to create the illusion of blinking, alternating, chasing, contracting or expanding, flashing, fading, repeating, oscillating, pulsating, rotating, rolling, running, scrolling, strobing, twinkling, or simulate moving video images, etc.
F. Signs shall not employ flashing lights or lights of changing degree or intensity of color.
G. Signs containing changeable copy produced by light emitting diodes (LEDs), incandescent or low voltage lamps or bulbs, or cathode ray tubes (CRTs) shall include automatic brightness compensation features to adjust brightness to compensate for sun angle and ambient light conditions, and ensure that the sign is visible, but not necessarily radiant.
H. Changeable copy signs shall be illuminated as specified in the illumination provisions of these regulations.

3:4.2-8 Message Board Signs for Institutional Use

Message board signs are changeable copy signs that are permitted only for institutional uses and are intended to provide schedules of events, rules, regulations, announcements, or similar messages excluding commercial advertisement or promotional messages. Institutional uses include educational, religious, recreational, civic, municipal, and other institutional uses including historic markers that are allowable in any zoning district under the zoning district regulations.

A. One (1) such sign oriented per street frontage per premises may be erected. Any two (2) such signs located on the same premises shall be located at least 100 feet apart as measured by using a straight line.
B. The maximum sign surface area of an institutional use message board sign which contains no facility identification or logo shall be no greater than thirty-two (32) square feet. If the principal identification sign and the message board are combined to serve as one (1) sign, the maximum surface area shall be fifty (50) square feet.
C. The maximum height in GD and I-1 zoning districts shall be fifteen (15) feet. The maximum height in all other zoning districts is ten (10) feet.
D. The front setback shall be a minimum of five (5) feet from the front property line in all zoning districts. The side setback shall be a minimum of ten (10) feet from the side property line in all zoning districts. If such sign is located adjacent to a residential use in any zoning district, the side setback will be a minimum of fifteen (15) feet.
E. Where additional height is required to raise the base of the sign to mean elevation (average street level) of the fronting street, the Planning Official may allow heights in excess of fifteen (15) feet in the GD and I-1 zoning districts, and heights in excess of ten (10) feet in all other zoning districts.

F. Locations with permanent message board signs shall not employ the use of temporary portable signs.
G. Signs shall be illuminated as specified in the illumination provisions of these regulations.
H. Such signs may not include commercial advertisement or promotional messages of any sort.

3:4.2-9 Bed and Breakfast Inn Signs

Permitted at bed and breakfast inns with valid Kershaw County use permits as follows:

A. One (1) freestanding sign or one (1) wall sign per street frontage is permitted. No other sign types are permitted. Freestanding signs on multiple street fronts shall be at least 100 feet apart as measured by the shortest straight line.
B. The maximum sign surface area of freestanding sign shall be five (5) square feet with a maximum height of five (5) feet. The maximum sign surface area of a wall sign shall be four (4) square feet.
C. A freestanding sign shall be set back a minimum of five (5) feet from the front property line. The side setback shall be a minimum of ten (10) feet from side property line. If the property is located adjacent to another residential use, the minimum side property line setback shall be fifteen (15) feet.
D. Such sign may be externally illuminated as specified in the illumination provisions of these regulations.

3:4.2-10 Directional Signs for Religious Institutions

Directional signs erected by a church, synagogue, mosque, or temple are permitted under the following conditions:

A. Such directional signs are permitted in all zoning districts.
B. No such sign shall exceed three (3) square feet in area, and eight (8) feet in height.
C. Such sign shall contain only pertinent directional information.
D. No individual church, synagogue, mosque, or temple may erect more than three (3) such signs within Kershaw County.
E. Such signs shall be located off the right-of-way or as permitted by SCDOT.
F. Such signs are limited to one (1) sign per intersection directional change.
G. Should more than one religious organization wish to locate a directional sign at any one location, all such signs shall be consolidated into one sign structure not to exceed twelve (12) square feet in area or eight (8) feet in height.
H. Such directional signs may not be illuminated.

3:4.2-11 Home Occupation and In-Home Family Day Care Signs

Building wall signs are allowed for home occupations and in-home family day cares with valid Kershaw County use permits as follows:

A. Maximum sign surface area shall be two (2) square feet.
B. Such signs shall not be illuminated.
C. One building wall sign per street frontage is permitted.
D. No sign types other than building wall signs are allowed.

3:4.2-12 Multiple Occupant Development Directory Signs

A multiple occupant development sign is a principal freestanding sign identifying the names of more than one business or activity conducted within a multiple occupant development which is

controlled by a single owner, landlord, or association. Examples include shopping centers, industrial parks, and office complexes.

A. Where allowed and as permitted in this section, multiple occupant signs are permitted where the activity associated with the sign is a permitted or conditionally permitted use under zoning district regulations.
B. One (1) multiple occupant development sign is permitted per street frontage so long as all signs are at least 100 feet apart as measured by the shortest straight line.
C. Maximum sign surface area for multiple occupant sites shall be fifty (50) square feet.
D. Maximum height in the GD and I-1 zoning districts shall be fifteen (15) feet. The maximum height in all other zoning districts shall be ten (10) feet.
E. Where additional height is required to raise the base of the sign to mean elevation (average street level) of the fronting street, the Planning Official may allow heights in excess of fifteen (15) feet in the GD and I-1 zoning districts, and heights in excess of ten (10) feet in all other zoning districts.
F. Such sign shall be set back a minimum of five (5) feet from the front property line and a minimum of ten (10) feet from the side property line in all zoning districts. If such sign is located adjacent to a residential use in any zoning district, the side setback shall be a minimum of fifteen (15) feet.
G. Sign shall not be located in a driveway or intersection sight triangle.
H. If sign is not located in a required buffer yard, the base of the sign shall be landscaped with mulch or turf and low profile plantings such as shrubs, ornamental grasses, or flowers. Such landscaping shall equal the total surface area of the sign face and shall be regularly maintained and kept in good condition.
I. Pole signs may only be internally illuminated. Monument (ground) signs may be internally or externally illuminated as specified in the illumination provisions of these regulations.
J. Changing or replacing the copy on an existing lawful multiple occupant development directory sign designed for changeable copy shall not require a permit, provided the copy change does not change the nature of the sign such as to render the sign in violation of this Ordinance.

3:4.2-13 Outdoor Drive-Thru Menu Boards

Outdoor drive-thru menu boards are signs associated with drive-thru restaurants which list the type and price of food items offered for sale and available at the drive-thru window of the establishment as follows:

A. Outdoor drive-thru menu boards shall be no more than thirty-two (32) square feet per side in size.
B. No more than two (2) menu boards shall be permitted.
C. Menu boards shall be designed, located, and landscaped or screened so that, to the degree feasible, they are not visible from any street right-of-way.
D. The menu board base shall be landscaped and/or incorporated into the landscaping plan.
E. No more than fifteen (15) percent of the total area of a menu board shall be utilized for business identification.
F. If illuminated, the menu board shall be internally illuminated as specified in the illumination provisions of these regulations.

3:4.2-14 Planned Development District (PDD) Signs

Unless alternate standards are specified in an approved development plan, all signage regulations of this section shall apply.

3:4.2-15 Residential Development Entrance Signs (Includes Single-Family, Multi-Family, and Manufactured Home Development Entrance Signs)

For the purposes of this Ordinance, a subdivision identification sign is a permanent sign that identifies a subdivision or neighborhood, and is located internal to and visible from the initial point of entry to a subdivision or from surrounding streets.

A. Such signs are permitted for all residential subdivisions, multi-family residential developments, and manufactured housing developments in all zoning districts in which such developments are permitted.
B. One (1) subdivision entrance sign not exceeding twenty (20) square feet in size and four (4) feet in height located at the main entry to any subdivision; or two (2) identical signs not exceeding sixteen (16) square feet in size each, and four (4) feet in height placed symmetrically on each side of an entry road of any residential subdivision are permitted.
C. Subdivision entrance signs may be located in the right-of-way of an internal subdivision street including a center median, but outside of the paved section of the roadway and a driveway or intersection sight triangle.
D. Such sign may be externally illuminated as specified in the illumination provisions of these regulations.
E. Where a single ground sign is erected, such sign shall have a minimum of fifty (50) square feet of landscaped area at the base of the sign. Where two (2) ground signs are erected, each sign shall have a minimum of twenty-five (25) square feet of landscaped area at the base of each sign. Landscaping shall be regularly maintained.
F. Such sign shall display no information other than the name of the subdivision.

3:4.2-16 Time and Temperature Signs

A. A time and temperature sign shall not be mounted on a separate structure, but must be incorporated into the allowable sign surface area of a permitted sign.
B. If a time and temperature sign alternates between a time message and a temperature message, it shall continuously show one message a minimum of six (6) seconds in time before switching to the other message.

3:4.2-17 On-Site Business Signs Located Adjacent to an Interstate Highway Interchange

In addition to the allowable freestanding signs established in Section 3:4.2-1, businesses constructed on property located adjacent to the rights-of-way for interstate highway interchanges are permitted one additional freestanding sign as follows:

A. The maximum height of such freestanding sign shall be seventy-five (75) feet provided the sign is more than 200 feet from a residentially zoned lot and located along the lot line contiguous to the interstate highway.
B. The maximum sign surface area shall be fifty (50) square feet.
C. Such additional display area shall not be transferable or assignable to any other signage on the property.

3:4.3 Signs Not Requiring a Permit or Registration

3:4.3-1 Regulations for Signs that Do Not Require a Permit or Registration

Signs that do not require a permit or registration shall adhere to the following regulations:

A. Unless otherwise stated, such signs may be placed in any zoning district.
B. All signs not requiring a permit or registration shall conform to all the applicable requirements contained in this Ordinance.
C. There shall be no limit as to the number of such signs on any lot, except as herein prescribed.
D. All such signs shall be located off the street right-of-way unless otherwise granted permission for such location by the appropriate local, State, or Federal transportation authority.
E. Such signs may be internally or externally illuminated, except as herein prescribed.

3:4.3-2 Signs that Do Not Require a Permit or Registration

The following types of signs do not require permits or registration:

A. **911 address signs** or plates on residential structures or premises and similar uses customarily associated with residential structures bearing the name and/or address of the occupant do not require a permit. Individual address numerals must be a minimum of three (3) inches in height with the sign surface area not exceeding two (2) square feet in area. Only one (1) such sign per street frontage is permissible. Such signs shall not be illuminated.
B. **Any sign inside a building** is permitted provided that indoor lighted signs, neon signs, or signs with strobe or flashing lights are not visible from beyond the property lines.
C. **Flags, pennants, insignia, or symbols of any religious, governmental, non-profit or not-for-profit organization** when not displayed in connection with a commercial promotion or as an advertising device. No such flag pole shall exceed thirty (30) feet in height. Flags shall not exceed forty (40) square feet in area. Limit three (3) per site. Flags shall be flown in accordance with the protocol established by the Congress of the United States for the Stars and Stripes or the State of South Carolina for the State flag. Any flag not meeting these conditions shall be considered a banner sign and shall be subject to regulations as such. Illumination is not permitted.
D. **Government Signs and Logos** - Permanent signs erected by, or on behalf of the city, County, State, or Federal government identifying streets or public property, conveying public information, and directing or regulating pedestrian or vehicular traffic.
E. **Historical markers, plaques, monuments**, or signs as recognized by State, local, or Federal authorities mounted in accordance with the United States Secretary of the Interior's Standards for Rehabilitation. Such signs shall not be illuminated.
F. **Hospital directional signs** erected by a public or private hospital, providing directions with no advertising. Maximum sign face surface area shall be three (3) square feet and the maximum height shall be eight (8) feet. Such signs shall not be illuminated.
G. **Individual newspaper boxes** with name or logo of newspaper, only when attached to or mounted adjacent to residential mailboxes. Such signs shall not be illuminated.
H. **Integral decorative or architectural features carved or built into a structure** so long as such features or works do not contain moving lights or parts. Such features shall not be illuminated.
I. **Memorial signs, plaques or grave markers** which are non-commercial in nature. No illumination is permitted.

J. **On-premise directional and instructional signs**, each not exceeding four (4) square feet in area are permitted. Such signs include, but are not limited to: Directional arrows, *No-Parking, Entrance, Enter, Exit, Telephone, Open, Closed*, etc. Also included are common signs indicating business hours of operation, which credit cards are accepted, group or associations to which the business belongs, or clubs or groups which utilize, recommend, inspect, or approve the business for use by its members. No directional or instructional sign shall display a commercial message.

K. **Sandwich Boards and Easel Signs -** Restaurants are permitted one (1) sandwich board or one (1) easel sign displaying the menu. The easel sign structure shall not exceed six (6) feet in height. The sign or message board on an easel shall not exceed three and one half (3½) square feet in area. Sandwich boards shall have a maximum surface area of six (6) square feet per side and be a maximum of three and one-half (3½) feet in height. Sandwich boards shall not be illuminated. Sandwich board and easel signs shall be located as not to obstruct public passage. Establishments shall only display sandwich boards or easel signs when the establishment is open for business.

L. **Public utility information signs** containing information regarding its poles, lines, pipes or facilities. Such signs shall not be illuminated.

M. **Signs displayed on donation containers** for not-for-profit charitable organizations which include only the name of the charity and/or the organization sponsoring the collection. Such signs shall not be illuminated.

N. **Signs located within a stadium** intended to be read only by persons seated within the stadium.

O. **Scoreboards and other signs at outdoor recreational facilities** intended to be read only by persons seated within such facilities.

P. **Signs on, or a part of a vending machine or telephone booth** which are an integral part of the vending machine or booth and advertise only the products or services available from that machine or booth. Such signs may only be internally illuminated.

Q. **Signs placed on, or a part of newspaper vending or display boxes** designed for the sale or distribution of newspapers. Such signs shall not be illuminated.

R. **Warning**, **No Trespassing**, **Posted**, **No Hunting**, and similar signs. Signs located in an undeveloped rural setting may be posted on poles, trees, and fences. Such sign shall not be illuminated.

S. **Signs on windows and glass doors**, providing that the sign surface area is proportional to the building scale and architectural features.

T. **Flags Displayed to Identify Commercial Operations -** One flag displaying business name or logo shall be permitted to be attached to the face of the building in which the business it advertises is located. If the business faces more than one public street, one flag per street frontage is permitted. No such attached flag shall exceed twenty (20) feet in height, measured from the top of the flag to the finished floor of the building, nor shall it be larger than twenty-five (25) square feet in area.

Table 3-10 PERMANENT SIGNS: MAXIMUM ALLOWED SIZE AND NUMBER

For complete regulations, refer to the provisions in this section for each individual sign type.

SIGN TYPE	MAX. SIGN SURFACE AREA	MAXIMUM HEIGHT	NUMBER PERMITTED
Freestanding	Single Occupancy: 32 sq. ft. Multiple Occupancy: 50 sq. ft.	GD, I-1: 15 ft. All other zoning districts: 10 ft.	1 per street frontage, 100 ft. apart.
Building Wall	10 sq. ft. or in proportion to building scale or store front.	Not to exceed beyond any point of a roofline, parapet, or mansard roof.	Single Occupancy: 1 per street front. Multi-Occupancy: 1 per street front per tenant.
Wall or Fence	One sign: 20 sq. ft. Two matching signs: 16 sq. ft.	4 ft.	1 individual sign or two matching signs per street frontage.
Awning	20% of awning surface area or in proportion to awning size and scale.	Mounted no higher than the bottom of 2nd floor sill or no higher than cornice, whichever is lower.	Single Occupancy: 1 per street front. Multi-Occupancy: 1 per street front per tenant.
Canopy	20% of canopy surface area or in proportion to canopy size and scale.	Mounted no higher than the bottom of 2nd floor sill or no higher than cornice, whichever is lower.	1 per street frontage.
Marquee	20% of marquee surface area or in proportion to marquee size and scale.	Mounted no higher than the bottom of 2nd floor sill or no higher than cornice, whichever is lower.	1 per street frontage.
Projecting	10 sq. ft. or in proportion to building scale or store front.	Mounted no higher than the bottom of 2nd floor sill or no higher than cornice, whichever is lower.	Single Occupancy: 1 per street front. Multi Occupancy: 1 per tenant spaced at least 20 ft. apart.
Message Board Institutional Use	32 sq. ft. if separate from principle identification sign. 50 sq. ft. if message board and principle identification sign are combined.	GD, I-1: 15 ft. All other zoning districts: 10 ft.	1 per street frontage, 100 ft. apart.
Bed & Breakfast	Freestanding: 5 sq. ft. Wall: 4 sq. ft.	Freestanding: 5 ft.	1 per street frontage, 100 ft. apart.
Directional Signs For Religious Institutions	One church, synagogue, mosque or temple: 3 sq. ft. More than one: 12 sq. ft.	8 ft.	1 per intersection directional change, limited to 3 within the County.
Home Occupation	2 sq. ft.	Mounted on wall at height in proportion to building.	1 per street front.
In-Home Family Daycare	2 sq. ft.	Mounted on wall at height in proportion to building.	1 per street front.
Drive-Thru Menu Boards	32 sq. ft. per side with only 15% for business identification	In proportion with menu board.	2 per location.
Residential Development Entrance	One sign: 20 sq. ft. Two identical: 16 sq. ft. each	4 ft.	Refer to Residential Subdivision Entrance Sign Regulations in text.

3:4.4 Temporary Signs

3:4.4-1 Temporary Sign Regulations

There are a number of instances in which a temporary sign may be necessary for a temporary cause or event. For purposes of this section, a temporary cause or event means an event that occurs only on a scheduled date or time period and for a specific purpose, regardless of whether the event is for commercial or non-commercial purposes. Examples include elections, grand openings of new businesses, buildings or developments under construction, church revivals, blood drives, pet vaccination clinics, and similar types of events. The Planning Official, therefore, shall permit temporary signs subject to the following conditions:

A. Temporary signs shall not be illuminated.
B. Temporary signs shall not be permanently attached to the ground, buildings, or other structures.
C. Unless otherwise stated, a property shall only display one temporary sign at a time.
D. No signs shall be placed in the public right-of-way except under circumstances as outlined in this section.

E. No temporary sign shall be located within a driveway or intersection sight triangle.
F. Any temporary sign that is not listed in Sections 3:4.4-2 and 3:4.4-3, below, is not allowable.

Temporary signs are divided into two categories: signs requiring registration and those not requiring registration. All signs, including those not requiring registration, shall comply with all applicable provisions of this Ordinance. Signs requiring registration may not be displayed or erected until registration and payment of a registration fee set by County Council is made.

3:4.4-2 Temporary Signs Requiring Registration

The following temporary signs are permitted and require registration:

A. **Temporary Contractors' Signs, Craftsmen's Signs, and Other Signs Pertaining to Construction** - One common sign temporarily erected and maintained on a job site while undergoing construction by contractor, craftsman, architect, developer, financial institution, subcontractor, or similar concern is allowed upon the premises of any work under construction or any work of major repair or improvement provided that:
   1. Only one (1) such sign oriented per street frontage per premises shall be erected. If the property lies on a corner lot or double frontage lot, then a second sign may be oriented along the second street so long as the two signs are at least 100 feet apart as measured by the shortest straight line.
   2. Signs in conjunction with any residential use shall not exceed ten (10) square feet per sign face, and shall not exceed eight (8) feet in height. Signs in conjunction with all other uses shall not exceed twenty (20) square feet per sign face area and shall not exceed ten (10) feet in height.
   3. The sign shall be placed a minimum of five (5) feet from the front property line, and a minimum of ten (10) feet from the side property line in all zoning districts. If such sign is located adjacent to a residential use in any zoning district, the sign shall be placed at least fifteen (15) feet from the side property line.
   4. Sign shall not be located in a driveway or intersection sight triangle.
   5. Signs shall not be illuminated.
   6. Such signs shall only appear at the proposed or active construction site.
   7. A building permit for the proposed structure (house, office, business, factory, etc.) shall be secured prior to erection of such sign.
   8. Signs shall be removed prior to issuance of a certificate of occupancy.

B. **Temporary Grand Opening and Opening Soon Banners** are only permitted when associated with the impending opening and/or grand opening of a new business ("Opening Soon" and "Grand Opening") as follows:
   1. Grand opening or opening soon banners are only permitted one (1) time for a business, and are not permitted to advertise sales, specials, or change of management.
   2. Such signs are permitted in O-I, B-2, B-3, I-1, GD, RD-1, RD-2, and MRD-1 zoning districts where the activity associated with the sign is a permitted or conditionally permitted use under zoning district regulations.
   3. One banner may be placed on each building wall which fronts on a public street.
   4. Banner shall be no more than ten (10) square feet in area.
   5. Temporary grand opening and opening soon banners shall not be illuminated.
   6. Banner shall only be attached to a building and shall not cover any window or part of a window, nor shall it extend beyond any point of a roofline, parapet, or mansard roof. The

banner shall not be attached to any temporary or permanent pole or any other structure other than the principal structure.

7. Opening soon banners are only permitted after securing a construction permit, certificate of occupancy, or use permit. Grand opening banners are only permitted for a 30-day period beginning on the date the use permit or certificate of occupancy is issued.

C. **Temporary Special Event Signs** are permitted for governmental, religious, charitable, civic, fraternal, or similar non-profit organizations or for-profit organizations advertising events providing a community service, and events promoting the community or in the public interest. Examples include church revivals, blood drives, and similar types of events. Temporary Special Event Signs shall be permitted provided that:

1. Only one (1) such sign oriented per street frontage per premises shall be erected. If the property lies on a corner lot or double frontage lot, then a second sign may be oriented along the second street so long as the two signs are at least 100 feet apart as measured by the shortest straight line.
2. No temporary special event sign shall exceed twenty (20) square feet in sign face area, and eight (8) feet in height.
3. All such signs shall be located off the street right-of-way except signs displayed on utility poles using brackets specifically designed to display such signs, provided that no such sign shall exceed five (5) square feet in area and three feet in height; written permission shall be granted by the appropriate local, State, or Federal transportation authority; and in no case may any such sign impede the view or travel of motorists or pedestrians.
4. The property owner upon whose land the sign is placed shall give written permission for the placement of said signs and will be held responsible for violations.
5. Such signs shall not be illuminated.
6. Signs shall be erected no sooner than fourteen (14) days prior to the event being advertised and shall be removed no later than two (2) days after the event.

D. **Temporary Off Premise Directional Signs** are temporary signs that are displayed for a forty-eight (48) hour period only, the purpose of which is limited exclusively to the identification of a use or occupancy located elsewhere and which tells the location of or route to such use or occupancy. Such signs are used to advertise events such as open houses, exhibits, or other recurring events, and are allowed in all zoning districts as follows:

1. Annually renewable permits shall only be issued to and held in the name of the:
    a. sign company erecting the sign;
    b. business owner associated with or identified on the sign; or
    c. real estate broker or agent.
2. Signs shall be placed no closer than one-quarter (¼) of a mile (i.e. 1320 feet) to another sign giving directions to the same location, unless the sign is placed near an intersection for the purpose of showing that a left or right turn is needed.
3. Signs shall be displayed during a forty-eight (48) hour period only; and shall not again be displayed for a minimum of twenty-four (24) hours following the end of the forty-eight (48) hour display period.
4. Signs shall include a directional arrow symbol and shall include no more than three (3) lines of text and a business or company logo.
5. Sign area shall not exceed twenty-four (24) inches by twenty-four (24) inches, and three (3) feet in height.
6. Sign shall not be illuminated.

7. Prior to placing a sign on private property, written consent must be obtained from the property owner(s). The written consent shall be submitted when application for the sign registration is made.
8. Signs shall be placed at least three (3) feet from the edge of the road pavement.
9. Signs may be placed along county roads in the right-of-way or on private property; provided, however, signs shall not obstruct visibility at any intersection location, nor shall the sign be erected within thirty (30) feet of an intersection, nor shall more than two (2) signs per permit holder be allowed at an intersection.
10. No sign shall be erected on or abutting a road owned and maintained by the State of South Carolina unless specifically allowed by the SCDOT.
11. No sign permitted in this subsection shall be erected more than one (1) mile from the site for which directions are being provided; or the nearest SCDOT classified collector or arterial road.
12. Upon presentation of a damaged or faded sign (with permit), Planning and Zoning will issue a replacement permit at no additional cost.

E. **Temporary Portable Signs Used to Advertise Special Events** – Portable signs may only be used to advertise special events for governmental, religious, charitable, civic, fraternal, or similar non-profit organizations or for-profit organizations advertising events providing a community service and events promoting the community or the public interest as outlined above in the section on temporary special event signs. The term *portable sign*, as used in this Ordinance refers to any sign with a sign frame or stand designed to be transported from place to place and not permanently installed. Such signs shall meet all of the requirements for Temporary Special Event Signs (above) plus the following:

1. The sign shall be placed a minimum of five (5) feet from the front property line, and a minimum of ten (10) feet from the side property line in all zoning districts, and shall not be located within a driveway or intersection sight triangle. If such sign is located adjacent to a residential use in any zoning district, the sign shall be placed at least fifteen (15) feet from the side property line.
2. Temporary portable signs may not be permanently attached to the ground, a building or other structure. Such signs shall be designed to resist twenty-eight (28) pounds per square foot wind pressure, and shall be securely anchored to the ground using one of the following methods:
   a. A minimum of two (2) one-fourth (¼) inch diameter steel galvanized cables attached to one-half (½) inch diameter expansion type anchors imbedded in concrete or asphalt type paving.
   b. A minimum of two (2) one-fourth (¼) inch diameter steel galvanized cables attached to a reinforced bar type anchor (re-bar) driven to a depth of sixteen (16) inches minimum.
   c. One-fourth (¼) inch diameter steel galvanized cable attached to a minimum forty-eight (48) pound weight extending to ground level on each corner thereof.
   d. One-fourth (¼) inch diameter steel galvanized cable attached to a minimum of two (2) manufactured home type ground anchors installed at a minimum depth of sixteen (16) inches.
3. Signs not properly anchored will be subject to immediate citation, removal, or elimination.
4. Such signs shall not be illuminated.

F. **Temporary Signs Announcing a Land Development** (Residential, Commercial, Mixed Use) are permitted, subject to the following:
   1. Such signs may be erected on the premises of the land approved for development provided such signs do not exceed twenty (20) square feet in sign face area and ten (10) feet in height.
   2. Not more than one (1) such sign shall be located at each main entrance to the development so long as any two signs are located at least 100 feet apart as measured by the shortest straight line.
   3. Such signs shall be set back a minimum of five (5) feet from the front property line in all zoning districts. The side setback shall be a minimum of ten (10) feet from the side property line in all zoning districts. If such sign is located adjacent to a residential use in any zoning district, the side setback shall be a minimum of fifteen (15) feet.
   4. Such signs shall not be illuminated.
   5. Signs shall be removed not more than 30 days from such time as the final plat is recorded with the Register of Deeds.

G. **Temporary Vendor's and Seasonal Roadside Stand Signs** are conditionally allowed in all zoning districts where vendors or seasonal roadside stands are an allowable conditional use per this Ordinance.
   1. Only one (1) sign per vendor or seasonal roadside stand operator shall be allowed, regardless of where it is mounted. Advertising materials attached to or painted onto automobiles are construed to be signs.
   2. Signs shall not exceed ten (10) square feet in sign face area, and shall not exceed four (4) feet in height.
   3. The sign shall be placed a minimum of five (5) feet from the front property line, and a minimum of ten (10) feet from the side property line in all zoning districts, and shall not be placed within a driveway or intersection sight triangle. The side setback shall be a minimum of ten (10) feet from the side property line in all zoning districts. If such sign is located adjacent to a residential use in any zoning district, the side setback shall be a minimum of fifteen (15) feet.
   4. Temporary vendor's or roadside stand operator's signs shall not be illuminated.
   5. Temporary vendor's signs shall be removed from the property each day at sundown. Seasonal roadside stand signs shall be removed upon cessation of seasonal operations.

3:4.4-3 Temporary Signs Not Requiring Registration

The following temporary signs do not require registration:

A. **Temporary Campaign and Election Signs** are permitted in all zoning districts provided that:
   1. One (1) sign per street frontage per candidate or issue being voted on shall be allowed. If the property lies on a corner lot or double frontage lot, then a second sign may be oriented along the second street so long as the two signs are at least 100 feet apart as measured by the shortest straight line.
   2. Signs in areas zoned residential shall not exceed six (6) square feet in sign face area, and shall not exceed four (4) feet in height. Signs in areas not zoned residential shall not exceed twenty (20) square feet in sign face area, and shall not exceed ten (10) feet in height.

3. No sign shall be placed in any right-of-way, on any telephone pole, street sign, fence, on any public property, or within a driveway or intersection sight triangle.
4. Temporary campaign and election signs shall not be illuminated.
5. In accordance with SC law, no such political sign shall be placed within 200 feet of any building in which an election poll is being conducted.
6. If the sign is placed on the property by someone other than the property owner, the property owner upon whose land the sign is placed shall give written permission for the placement of said sign and will be held responsible for violations.
7. All such signs shall be erected no sooner than sixty (60) days in advance of each specific election or referendum for which they are made.
8. All such signs shall be removed within seven (7) days after the election or referendum for which they were made. Signs for runoff elections may remain until seven (7) days after the final election to which the signs apply.

B. **Temporary Garage or Yard Sale Signs** are permitted in any zoning district provided:
1. One (1) on-premise yard or garage sale sign, and a maximum of two (2) off-premise directional signs per event are permitted.
2. No such sign shall be greater than four (4) square feet in sign face area, and four and one-half (4½) feet in height.
3. Temporary garage or yard sale signs shall be located off the street right-of-way.
4. Such signs shall not be erected more than twenty-four (24) hours before the advertised event, and shall be removed within twenty-four (24) hours after the event has terminated.

C. **Temporary Help Wanted Signs** are allowed in all zoning districts provided:
1. One (1) such sign per site shall be permitted.
2. Such sign shall not exceed three (3) square feet in sign face area, and four (4) feet in height unless window or wall mounted.
3. If not wall or window mounted, the sign shall be placed a minimum of five (5) feet from the front property line and a minimum of ten (10) feet from the side property line in all zoning districts. If such sign is located adjacent to a residential use in any zoning district, the side setback shall be a minimum of fifteen (15) feet.
4. Business name or logo cannot utilize more than ten (10) percent of sign face area.
5. Such sign shall not be illuminated.
6. Temporary help wanted signs shall be removed once employee is hired.

D. **Temporary Real Estate Signs** advertising a specific property for sale, lease, rent or development are permitted in all zoning districts as follows:
1. Signs may be located only on the property for which they advertise sale, rent, lease or development.
2. One sign per street frontage advertising real estate for sale, for rent, for lease, or for development. If the property so advertised lies on a corner lot or double frontage lot, then a second sign may be oriented along the second street so long as the two signs are at least 100 feet apart as measured by the shortest straight line.
3. Signs in areas zoned residential shall not exceed ten (10) square feet in sign face area, and shall not exceed four (4) feet in height. Signs in areas not zoned residential shall not exceed twenty (20) square feet in sign face area, and shall not exceed ten (10) feet in height.
4. The sign shall be placed a minimum of five (5) feet from the front property line, and a minimum of ten (10) feet from the side property line in all zoning districts. If such sign

is located adjacent to a residential use in any zoning district, the sign shall be placed at least fifteen (15) feet from the side property line.

5. Temporary real estate signs shall not be illuminated.
6. The sign shall be removed once the property is occupied by the new tenant or when the property is sold by transfer of title to the same, whichever time period is less.

3:4.5 Prohibited Signs

3:4.5-1 Prohibited Signs and Prohibited Sign Characteristics

All signs not expressly permitted under this Ordinance are prohibited. Such signs include, but are not limited to the following:

A. **Signs Located in the Public Right-of-Way -** Any sign, banner, or display placed on any curb, sidewalk (except where otherwise permitted in this Ordinance), post, pole, hydrant, bridge, tree, or other surface located on, over, or across any public street or right-of-way is prohibited except for governmental signs and where otherwise permitted in this Ordinance where unique circumstances or conditions exist to warrant the placement of a sign within the road right-of way. Such signs shall be approved by the Planning Official, be authorized by the SCDOT, and/or the Kershaw County Sheriff's Department, and shall not be located in a driveway or intersection sight triangle or in an area that would cause a traffic hazard. If utility and road maintenance is necessary, the cost of relocating all signs in the right-of-way shall be assumed by the property owner.

B. **Signs Imitating Traffic, Governmental, or Emergency Signals -** Signs not erected by a public authority that are displayed in a manner that could mislead or confuse drivers, cyclists, or pedestrians are prohibited. This includes signs which imitate an official traffic sign or signal, emergency or law enforcement vehicle, public notice, or which display misleading words, rotating discs, symbols, intermittent lights resembling the color, size, shapes, or order of lights customarily used in traffic signals or on emergency or law enforcement vehicles. Examples include signs using the words *stop*, *yield*, or *danger*, or any word, phrase, or symbol such as a picture of a traffic sign.

C. **Signs or Devices Employing Distracting, Flashing, or Intense Illumination or Color -** Flashing signs, signs with flashing or reflective discs, signs with flashing lights or lights of changing degree or intensity or color are prohibited. "Day-glow" or highly reflecting coloring, paint, or other reflective materials which may impair the vision, cause glare, or otherwise interfere with any driver's operation of a motor vehicle or bicycle are not allowed.

D. **Animated Signs -** Any sign, or any part of a sign, that changes copy or image more frequently than once every fifteen (15) seconds is considered to be animated and is not allowable. Included are signs that employ motion or the illusion of motion by any means (manual, electronic, mechanical, electrical, atmospheric, panels, slats, discs, or lights, etc.) to depict action or create a special effect or scene. Also included are signs that create the illusion by blinking, alternating, chasing, contracting or expanding, flashing, fading, repeating, oscillating, pulsating, rotating, rolling, running, scrolling, strobing, twinkling, simulating moving video images, etc. Exception: If a time and temperature sign alternates between a time message and a temperature message, it shall continuously show one message a minimum of six (6) seconds in time before switching to the other message.

E. **Signs Obstructing Driver's Views -** Any sign which the Planning Official determines obstructs or interferes with a driver's view of merging, approaching, or intersecting traffic, or

of a traffic signal, sign, or devise, or which would otherwise interfere with a driver's operation of a motor vehicle or bicycle shall be prohibited.

F. **Abandoned Signs -** Abandoned signs shall not be permitted. A sign shall be deemed abandoned and in cessation of use when any of the following have occurred for thirty (30) continuous days:
   1. The sign relays information that is no longer pertinent or up-to-date.
   2. The sign no longer advertises a bona fide business, lessor, owner, product, activity conducted, or product available.
   3. The structure does not contain a sign surface area.
   4. The sign contains no message. For such purposes, the terms "Sign for Rent," "Sign for Lease," etc. shall not be deemed to be a message.
   5. There is no longer any business activity on the site.

G. **Bench Signs -** Signs on benches are not permitted.

H. **Dilapidated and Unsafe Signs -** Any sign which is not properly maintained; is insecure, or otherwise structurally unsound; has defective parts in the supports, guys and/or anchors; or is unable to withstand wind pressure of 100 miles per hour as determined by the Building Official and applicable regulations as provided in the applicable building codes is prohibited.

I. **Fluttering Signs -** Fluttering signs or devices, all or part of which are set in motion by movement of the atmosphere, mechanical, electrical, or any other means are prohibited. Such items include rotating or otherwise moving devices, whirligigs, pennants, posters, propellers, discs, ribbons, streamers, strings of light bulbs, spinners, and flags (other than flags, pennants, insignia, or symbols of any religious, governmental, non-profit or not-for-profit organization when not displayed in connection with a commercial promotion or as an advertising device) regardless of whether they contain written messages.

J. **Inflatable Signs -** Inflatable signs, including balloons, are prohibited.

K. **Off-Premise Advertising -** Any sign, with the exception of temporary special event, campaign, election, garage sale, yard sale, and off-premise directional sign, that identifies or communicates a message related to an activity conducted, a service rendered, or a commodity sold, which is not the primary activity, service or commodity provided on the site where the sign is located shall be prohibited. Off-premise advertising signs lawfully erected prior to the effective date of this Ordinance may require compensation for removal or relocation per South Carolina Code of Laws, Title 39, Chapter 14. This Ordinance does not regulate Specific Information Service Signs on Interstate 20 as outlined in South Carolina Code of Laws, 63-338.

L. **Portable Signs -** The term *portable sign*, as used in this Ordinance refers to any sign placed in a frame or stand designed to be transported from place to place and not permanently installed. Such signs are prohibited except as temporary special event signs for institutional, non-profit, or pubic interest uses only. This provision excludes restaurant menu sandwich boards and easels.

M. **Roof Signs -** Any sign, sign structure, painted sign, or sign extending above or higher than the cornice is prohibited.

N. **Signs Attached to Awnings, Marquees, Canopies, Building Facades, and Projecting Signs -** Any sign affixed to any structure or sign frame that is not flush with, or integral to that structure or sign frame is prohibited.

O. **Signs Obstructing Ingress, Egress, Light, or Air -** Any sign located outdoors which interferes with free passage from, or obstructs any fire escape, downspout, window, door,

stairway, ladder, or opening intended as a means of ingress or egress or providing light or air is prohibited.

P. **Signs Obstructing Other Signs -** Any sign which is located in such a way as to intentionally deny visual access to an adjoining property's existing sign is prohibited.
Q. **Signs on Fences, Poles, or Trees -** Any sign or advertising device attached to or painted on a fence, utility or telephone pole, tree, stone, or any other natural object is prohibited except as specifically provided in this section. *Warning*, *No Trespassing*, *Posted*, *No Hunting*, and similar signs located in an undeveloped rural setting may be posted on poles, trees, and fences.
R. **Signs on Parked Motor Vehicles or Trailers -** Signs placed or painted on a motor vehicle or trailer and parked or mounted for the primary purpose of providing signs not otherwise allowed by this code are prohibited.
S. **Signs on Refuse Containers -** Signs on refuse containers are not permitted except for signs identifying the container provider.
T. **Signs violating any provision of any law of the State or Federal Government relative to outdoor advertising** are prohibited.
U. **Signs with Intense Lighting Adjacent to Residential Uses -** No sign shall be illuminated in such a way that it casts intense illumination onto any residential premises located in any zoning district in a manner which by intensity, duration, location, or other characteristic is incompatible with the residential character of the property on which such illumination is cast.
V. **Signs with Sound, Odor, or Matter -** Signs which emit audible sound, odor, or visible matter are prohibited.
W. **Signs Erected Without Property Owner's Permission -** Signs placed on a piece of property without written permission of its owner or agent are not allowed.
X. **Spot and Strobe Lights -** Any spot light or light that shines into the sky or the clouds, moveable or non-moveable, for the purpose of attracting attention to a location is not permitted.
Y. **Unlawful Signs -** Any sign that does not have a sign permit or has been installed, erected, or constructed in violation of any of the terms of this Ordinance is prohibited.

3:4.6 Signs Located in the Public Right-of-Way and on Public Property

3:4.6-1 Regulations for Signs in the Public Right-of-Way and on Public Property

Any sign installed or placed on public property, except in conformance with the requirements of this section, shall be forfeited to the public and subject to confiscation. In addition to other remedies hereunder, Kershaw County shall have the right to seek recovery from the owner or person placing such sign the full costs of removal and disposal.

3:4.6-2 Signs Permitted in the Public Right-of-Way and on Public Property

No sign shall be allowed to extend over or be erected in the public right-of-way, except for the following:

A. Public signs erected by or on behalf of a governmental body to post legal notices, identify public property, convey public information, and direct or regulate pedestrian or vehicular traffic.
B. Bus stop signs erected by a public transit company and identification signs on bus shelters in association therewith.
C. Informational signs of a public agency or utility regarding its facilities.

D. Temporary special event signs for governmental, religious, charitable, civic, fraternal, or similar non-profit or for-profit organizations advertising events providing a community service and events promoting the community or in the public interest may be displayed on utility poles providing that they are mounted by brackets specifically designed to display such signs; no such sign shall exceed five (5) square feet in area and three (3) feet in height; written permission shall be granted by the appropriate local, State, or Federal transportation authority; in no case may any such sign impede the view or travel of motorists or pedestrians; and signs shall be erected no sooner than fourteen (14) days prior to the event and shall be removed no later than two (2) days after the event.
E. Subdivision entrance signs may be located in the right-of-way of an internal subdivision road including a center median but outside of the paved section of the roadway and a driveway or intersection sight triangle.

3:4.7 Sign Measurements

3:4.7-1 Sign Height

Sign height is measured from the natural grade below the sign to the highest point of the sign face or structure, whichever is higher. The height shall not be measured from the top of an earth berm, support foundation, or planting box.

3:4.7-2 Sign Clearances

Sign clearances are measured from the grade directly below the sign to the bottom of the sign frame.

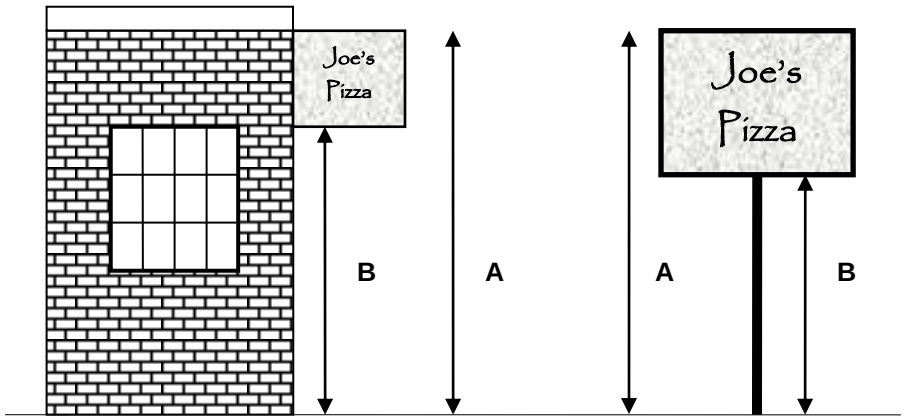

A= Height B= Clearance

3:4.7-3 Sign Frame Area

The sign frame area consists of the dimensions of a geometric shape formed by all supports, frames, braces, borders, and embellishments which extend beyond the sign surface area and that encloses the sign surface area and does not contain any copy, logo, advertising, name, or message.

3:4.7-4 Sign Surface Area

The sign surface area is the area inside a geometric shape enclosing any message, logo, symbol, name, photograph, or display face. All area provisions in this Ordinance are calculated from the sign surface area dimensions as defined above.

3:4.7-5 Double-Sided Signs

In the case of signs mounted back-to-back, only one side of the sign is to be used for computation of the sign surface area. Double-sided signs shall be defined as two-sided signs with parallel faces twelve (12) inches apart or less, or with faces joining at an angle of ten (10) degrees or less. Otherwise, the surface area of each sign is to be separately computed.

(Signs Viewed from Above)

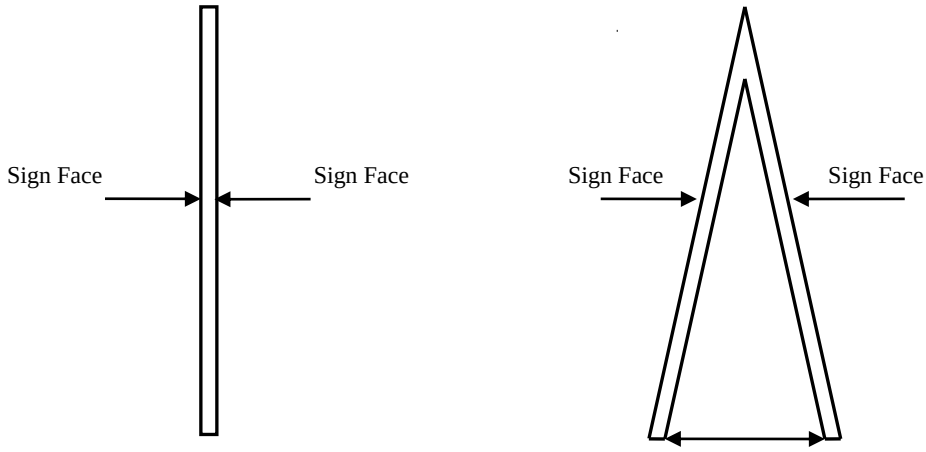

Count as one sign if sign faces are parallel or within twelve inches of each other.

Count as one sign if sign faces are joined at angle of 10 degrees or less, or within 1 foot of each other.

3:4.7-6 Multiple Cabinet Signs

For freestanding and projecting signs that contain multiple modules on one structure, and are oriented in the same direction, the modules together are counted as one (1) sign.

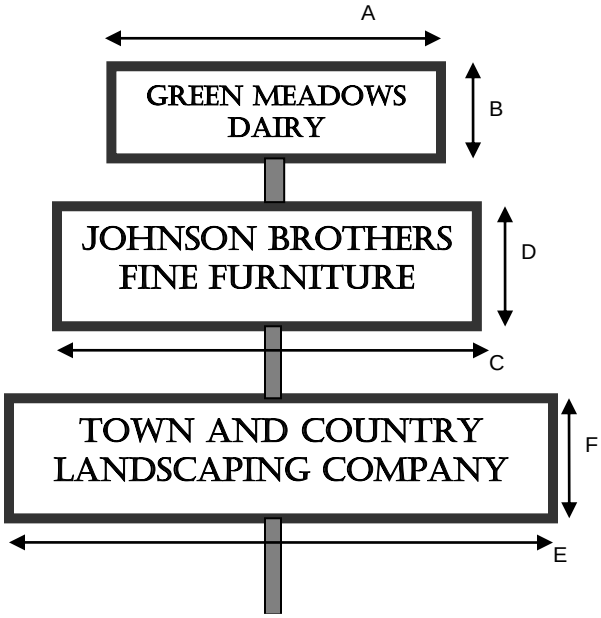

Total Sign Area = (A) (B) + (C) (D) + (E) (F)

3:4.7-7 Round, Cube, and Other 3-D Signs

In the case of cylindrical signs, signs in the shape of cubes, or other signs which are substantially three-dimensional with respect to their display surfaces, the entire display surface or surfaces are included in computations of area.

3:4.7-8 Individual Element Signs

When signs are constructed of individual elements attached or applied to a wall, fence, or building wall, the sign area is determined by calculating the area of an imaginary rectangle drawn around the sign elements. Sign elements will be measured as one (1) unit when the distance between the elements is less than two (2) times the dimension of each element.

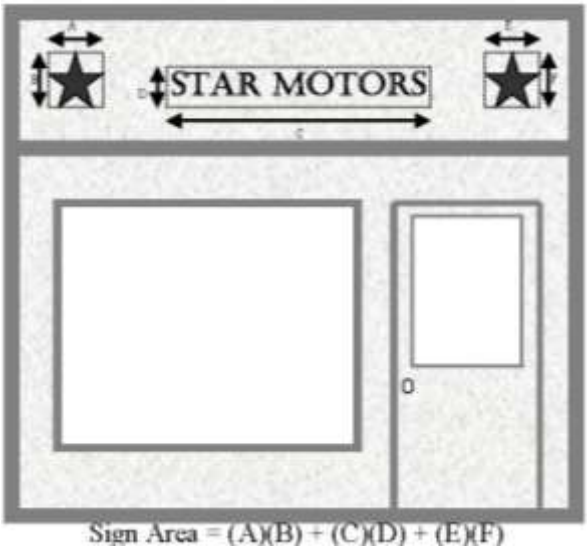

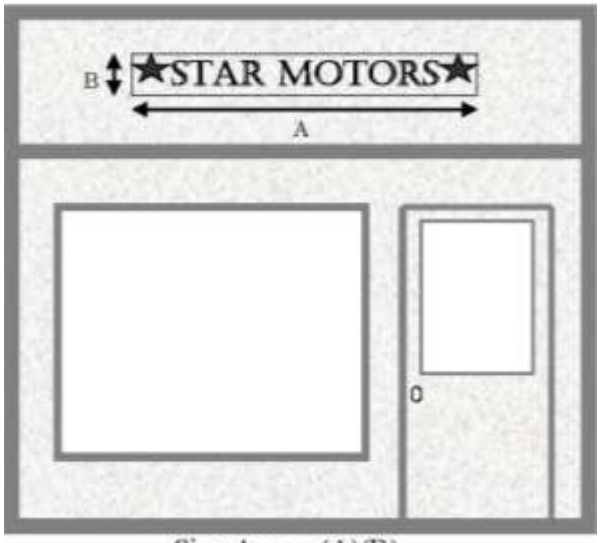

Sign Area = (A)(B)

3:4.7-9 Signs on a Base Material
When a sign is on a base material and attached without a frame, such as a wood board or Plexiglas panel, the dimensions of the base material are to be used to compute sign surface area.

3:4.7-10 Signs on Awnings, Canopies, and Marquees
When signs are incorporated into awnings, canopies, and marquees, the sign area is determined by computing the area of an imaginary rectangle drawn around the sign face.

3:4.8 Placement of Signs

3:4.8-1 Placement
Except as provided in this section, no sign shall be placed closer than five (5) feet to the public right-of-way or property line. Freestanding signs may be erected in the required yard setbacks and buffer areas.

3:4.8-2 Signs in the Public Right-of-Way
No sign shall be allowed to extend over or be erected in the public right-of-way, except for those outlined in the provisions of this section regulating signs located in the public right-of-way.

3:4.8-3 Visibility at Intersections
Railroad, street, and driveway intersections shall be unobstructed for the vision of motorists, pedestrians, and other possible users. No plantings or vegetation shall be placed or maintained, and no sign, fence, building, wall, or other structure shall be located in a visual clearance area within an intersection site triangle or a driveway sight triangle as defined below. The Public Works Director shall make a determination of compliance with visibility at intersections, if required.

A. **Visual Clearance Area** - An area with a height of between two and one-half (2½) feet and ten (10) feet, measured from the upper edge of the curb or pavement, and located within an intersection or driveway sight triangle, where no sign, planting, fence, building, wall, or other

structure shall be located. Exception: Poles and support structures less than twelve (12) inches in diameter may be permitted in such areas.

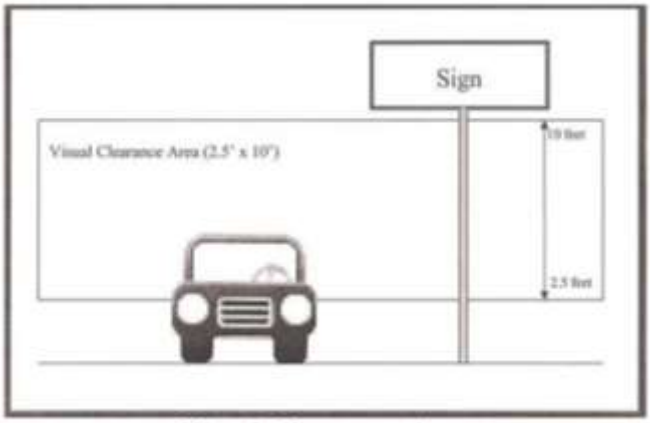

Visual Clearance Area

B. **Sight Triangle** - A triangular area, measured from the curb or edge of pavement, created by a line connecting points on the front and side for lines at a determined distance from the intersection of said lines or the extension of said lines. The following two types of sight triangles are used in this Ordinance:

1. **Intersection Sight Triangle** - A triangle established by multiplying the speed limit of the road which is being accessed by ten (10). The sight distance for a speed limit of 35 MPH would be 350 feet at the intersection. The resulting intersection sight distance triangle is determined by measuring from a point fifteen (15) feet from the edge of pavement of the road being accessed to the points providing the minimum intersection sight distance in each direction.

Intersection Sight Triangle for Road with 35 MPH Speed Limit

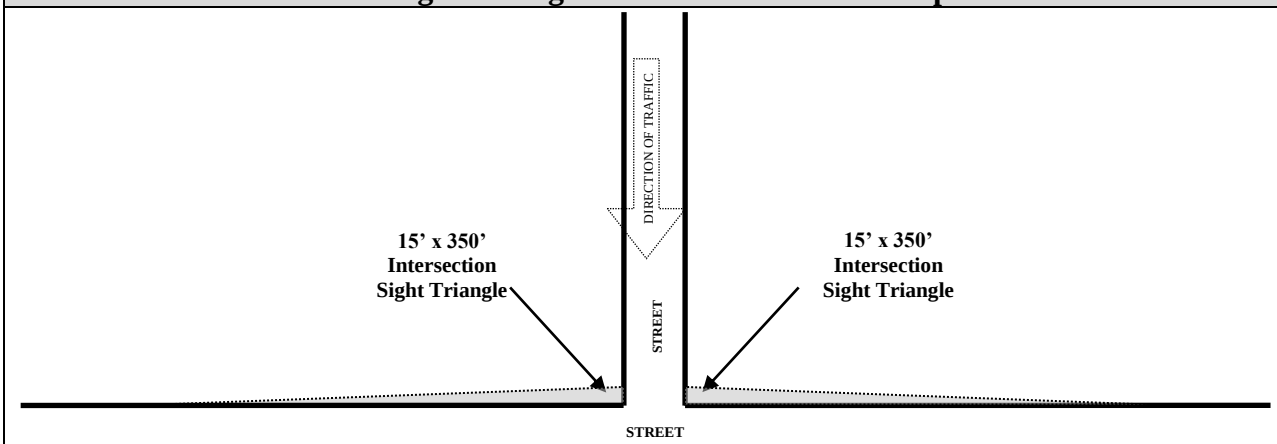

2. **Driveway Sight Triangle** - The driveway sight triangle is one that is measured ten (10) feet along the driveway and ten (10) feet along the edge of pavement. In the event that parking is allowed adjacent to the curb, ten (10) feet will be measured along the edge of the driveway and ten (10) feet along the edge of the lane of traffic. In the event that a driveway crosses a sidewalk, ten (10) feet will be measured along the driveway and ten (10) feet along the edge of the sidewalk. Refer to illustrations in the sign measurement provisions of this Ordinance.

Driveway Sight Triangles for Streets with No Parking Spaces or Sidewalks

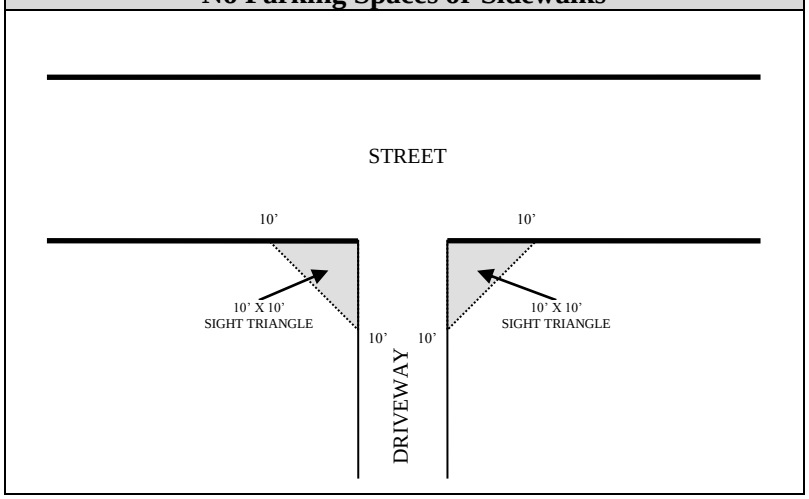

Driveway Sight Triangles for Streets with Parking Spaces

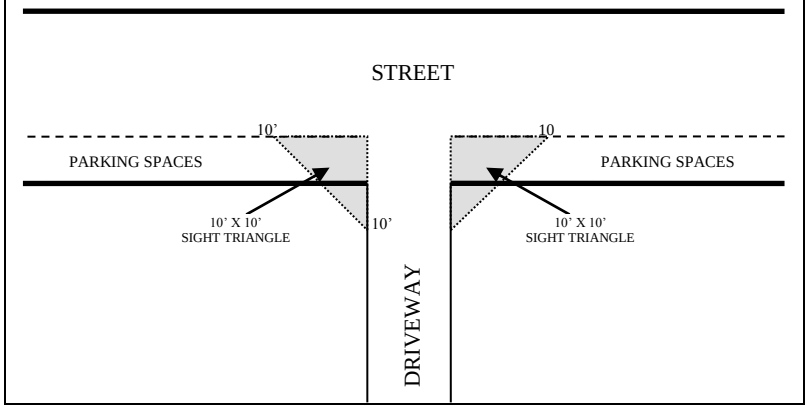

Driveway Sight Triangles for Streets with Sidewalks

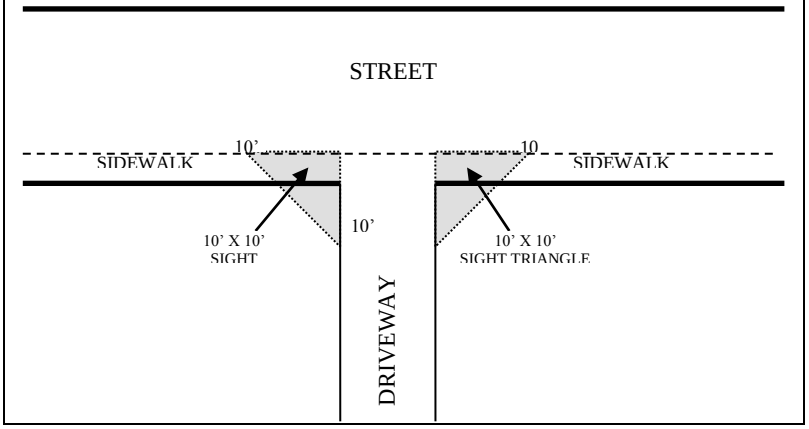

3:4.8-4 Pedestrian Area Clearance

When a sign extends over sidewalks or other public pedestrian ways, the bottom of the sign structure shall be at least eight (8) feet above the ground. Exception: Signs hanging from porch ceilings and roof overhangs as specified in this section.

3:4.8-5 Use of Buffer Areas

Freestanding signs which have been properly permitted may be installed in buffer areas.

3:4.9 Illumination of Signs

3:4.9-1 Illumination Regulations

All illuminated signs shall conform to the following requirements:

A. All signs when illuminated shall have such lighting shielded so as not to directly shine on abutting properties or in the line of vision of the public using the streets or sidewalks.
B. No sign shall be illuminated in such a way that it causes intense illumination onto any residential premises located in any zoning district in a manner which by intensity, duration, location, or other characteristic is incompatible with the residential character of the property in which such illumination is cast.
C. Internally illuminated signs may not project light beyond the face of the sign or otherwise cause a glare.
D. Externally lighted signs shall have their lighting directed in such a manner as to illuminate only the face of the sign.
E. All lighted signs shall meet all applicable electrical codes and shall bear a nationally recognized electrical testing laboratory label (such as a UL label).
F. No illumination simulating traffic control devices or emergency vehicles shall be used, nor shall lights which are intermittently switched on or off, changed in intensity or color, or otherwise displayed to create the illusion of flashing or movement be permitted.
G. Signs containing changeable copy produced by light emitting diodes (LEDs), incandescent or low voltage lamps or bulbs, or cathode ray tubes (CRTs) shall include automatic brightness compensation features to adjust brightness to compensate for sun angle and ambient light conditions, and ensure that the sign is visible, but not necessarily radiant.

Table 3-11 SIGN ILLUMINATION STANDARDS

Sign Type	Illumination Type
911 Address Sign on Residential Structure, Premises	No Illumination
Bed and Breakfast Sign	External
Building Wall Sign	Internal
Directional Sign for Religious Institutions	No Illumination
Donation Container Sign	No Illumination
Drive-In Menu Board Sign	Internal
Flags and Pennants	No Illumination
Government Sign or Logos	Internal of External
Hanging or Projecting Sign	Internal
Historical Marker, Plaque, Monument	No Illumination
Home Occupation and In-Home Family Daycare Sign	No Illumination
Hospital Directional Sign	No Illumination
Continued on the following page	

Table 3-11 SIGN ILLUMINATION STANDARDS, Continued	
Sign Type	**Illumination Type**
Individual Newspaper Box	No Illumination
Integral Decorative or Architectural Feature	No Illumination
Manufactured Home Development Entrance Sign	External
Memorial Sign, Plaque, Grave Marker	No Illumination
Monument (Ground) Sign	Internal or External
Multi-Family Residential Development Entrance Sign	External
Newspaper Vending or Display Box	No Illumination
On-Premise Directional Sign	Internal of External
Perimeter or Retaining Wall or Fence Sign	Internal or External
Pole (Pylon) Sign	Internal
Public Utility Information Sign	No Illumination
Residential Subdivision Entrance Sign	External
Sandwich Board, Easel Sign	No Illumination
Scoreboard and Signs at Recreational Facilities	Internal of External
Sign Inside a Building	Internal or External
Sign on Awning	No Illumination
Sign on Canopy or Marquee	Internal
Sign within a Stadium	Internal of External
Temporary Sign	No Illumination
Vending Machine, Telephone Booth	Internal
Warning, No Trespassing, Posted, No Hunting Sign	No Illumination

3:4.10 Sign Materials

3:4.10-1 Code Compliance

Signs shall be constructed in accord with all applicable provisions of all current building and electrical codes. They shall consist of durable all-weather materials, maintained in good condition, and not be permitted to fall into disrepair.

3:4.11 Existing Nonconforming Signs

3:4.11-1 Regulations for Existing Nonconforming Signs

A. Except as herein provided, the use of nonconforming signs that were otherwise lawful on the effective date of this Ordinance may be continued.
B. No person may engage in any activity that causes an increase in the extent of nonconformity of a nonconforming sign or causes a previously conforming sign to become nonconforming.
C. A nonconforming sign may not be moved, altered, or replaced except to bring the sign into complete conformity with this Ordinance. This includes any change to the sign surface area. The tenant name or tenant's message on a nonconforming multiple occupant development sign may be changed so long as it does not create any new nonconformities. Once a nonconforming sign is removed from the premises or otherwise taken down, altered, or moved, said sign may only be replaced with a sign which is in conformance with the terms of this Ordinance.
D. Upon adoption of this Ordinance, all legal nonconforming signs shall comply with the maintenance and upkeep requirements of this section. Minor repairs and maintenance of

nonconforming signs necessary to keep a nonconforming sign for a particular use in sound condition are permitted so long as the nonconformity is not in any means increased.

E. If a nonconforming sign is destroyed by natural causes, otherwise damaged, or requires major repairs, it may not thereafter be repaired, reconstructed, or replaced except in conformity with all the provisions of this Ordinance, and the remnants of the former sign structure shall be cleared from the land. For purposes of this section, a nonconforming sign shall be considered destroyed or damaged if it receives damage or requires major repairs to an extent of more than fifty (50) percent of the sign's replacement value immediately prior to the sign having received said damage.

F. If a nonconforming sign remains unused for a continuous period of thirty (30) days, that sign shall be deemed abandoned and shall, within thirty (30) days after secession of use, be altered to comply with this Ordinance or be removed by the sign owner, owner of the property where the sign is located, or other person having control over such sign. The Planning Official may grant an extension to this thirty (30) day period for extenuating circumstances. For purposes of this Ordinance, a sign shall be deemed abandoned if:
   1. The sign relays information that is no longer pertinent or up-to-date.
   2. The sign no longer advertises a bona fide business, lessor, owner, product, activity conducted, or product available.
   3. The structure does not contain a sign surface area.
   4. The sign contains no message. For such purposes, the terms *Sign for Rent, Sign for Lease*, etc. shall not be deemed to be a message.
   5. There is no longer any business activity on the site.

3:4.11-2 Off-Premise Advertising

Any sign that identifies or communicates a message related to an activity conducted, a service rendered, or a commodity sold, which is not the primary activity, service, or commodity provided on the site where the sign is located shall be prohibited. Off-premise advertising signs lawfully erected prior to the effective date of this Ordinance may require compensation for removal or relocation per South Carolina Code of Laws, Title 39, Chapter 14. This Ordinance does not regulate Specific Information Service Signs on Interstate 20 as outlined in South Carolina Code of Laws, 63-338.

3:4.12 Maintenance and Upkeep of Signs

3:4.12-1 Maintenance and Upkeep Regulations

All signs and all components thereof, including supports, braces, and anchors, etc. shall be kept in a good state of repair and in conformance with the requirements of this Ordinance as follows:

A. All signs shall conform to the building, electrical, and fire codes adopted by the County.

B. All signs and/or sign structures shall be perpetually maintained in sound structural condition and able to withstand wind pressure of 100 miles per hour.

C. No sign and/or sign support structure shall be allowed to deteriorate to a condition in which it is unsightly in appearance or to a condition in which it requires repairs or renovations. For the purposes of this subsection, the term *unsightly in appearance* shall include, but not be limited to the following conditions: Sign copy or sign support structures that are cracked, bent, broken, tattered, torn, rotted, peeling, chipping, fading, rusting, missing, loose, or otherwise deteriorating, especially such that the sign copy is no longer clearly legible.

D. Reverse sides of signs shall be properly finished with no exposed electrical wires or protrusions.
E. All non-functioning bulbs or damaged panels shall be replaced or repaired.
F. All sign copy shall be maintained securely on the sign face and all missing copy shall be replaced.
G. The area around the sign shall be properly maintained, clear of overgrown vegetation, and other obstacles.

3:4.13 Removal of Signs

3:4.13-1 Sign Removal Regulations

The Planning Official shall cause to be removed the following:

A. Any sign which is determined by the Planning Official or Building Official as being insecure, in danger of falling, or otherwise endangering the public safety, shall be immediately removed by its owner unless it is repaired and made to otherwise comply with the requirements of this Ordinance. If sign is not removed or repaired by the owner within thirty (30) days, the Planning Official shall cause such sign to be removed and eliminated.
B. Not withstanding the above, the Planning Director or Building Official, without notice, may remove and eliminate, or cause to be removed and eliminated any sign which is considered a public nuisance or threat to public safety.
C. Any sign erected, constructed, altered, or displayed without a required sign permit or registration may be eliminated.
D. Any sign not maintained according to the maintenance and upkeep provisions of this section shall be eliminated.
E. Any sign now or hereafter existing and in conformance with this Ordinance which advertises a business no longer conducted, or a product no longer sold shall have the sign copy removed:
    1. Within thirty (30) days after written notification from the Planning Official.
    2. Within six (6) months after termination of business. Signs which relay that the business facility is for sale or lease may remain beyond the six (6) month period as long as it is maintained in accordance with the provisions of this section.
F. Any sign otherwise prohibited by this Ordinance or in non-compliance with the provisions of this Ordinance shall be removed and eliminated.
G. The Planning Official or Building Official shall have the right to seek court recovery from the owner or persons placing such signs the full cost of removal, repair, and/or elimination of any sign in violation of this Ordinance.

3:4.14 Administration and Enforcement

3:4.14-1 Permits and Registration

Except as otherwise provided in this Ordinance, it shall be unlawful for any person to erect, construct, alter, move, or replace any sign or cause the same to be done, without first having obtained a required sign permit or registration for such sign from the Planning Official as certification that the requirements of the Ordinance have been satisfied and that all fees have been paid. This provision is applicable to a property owner, a property lessee, a sign company, a contractor, or any other person who erects or causes to have erected a sign requiring a permit or registration. It shall be the responsibility of the person erecting the sign to ensure that any and

all required permits and registrations have been obtained prior to erecting the sign. The Planning Official may order the removal of any sign which, after a permit or registration has been obtained, is not constructed in accordance with this Ordinance.

3:4.14-2 Application Requirements for a Sign Permit

Each application to erect a sign, where a sign permit is required by this Ordinance, shall be accompanied by the following information:

A. Name and contact information, as required, of property owner and/or leaseholder, manager/owner of business being advertised, owner of sign, and sign company representative.
B. Written permission to erect the proposed sign from the owner and/or leaseholder of property on which the sign is to be erected.
C. Site plan sketch with dimensions (non-professionally drafted plan is acceptable) showing the location of the sign with respect to the property and right-of-way lines, building and setback lines, driveway and intersection sight triangles, buildings, parking areas, existing freestanding signs, tree protection, and buffer areas.
D. Correct size, shape, configuration, face area, height, nature, number, and type of sign or signs to be erected, including the size of letters, graphics, colors, clearances, connection, and support methods.
E. The value of the sign and sign structure.
F. Any other such information as may be required by the Planning Official, filed on forms provided by the Planning Official.
G. The Planning Official may waive any of the informational requirements listed above deemed unnecessary to process an application.

3:4.14-3 Sign Permit Certification

Upon documentation and site inspections that all items in the application requirements for a sign permit provisions of this Article have been addressed and completed, a sign permit certification shall be signed by the Planning Official or Building Official and issued to the applicant.

3:4.14-4 Application Requirements for Sign Registration

Each application to erect a sign, where sign registration is required by this Ordinance, shall be accompanied by the following information:

A. Name and contact information, as required, of property owner and/or leaseholder, manager/owner of business being advertised, and owner of sign.
B. Written permission to erect the proposed sign from the owner and/or leaseholder of property on which the sign is to be erected.
C. Sketch of location of the sign on the property on which it is to be erected.
D. Description of the sign to include the size, shape, configuration, face area, height, nature, and type of sign to be erected.
E. A statement signed by the person receiving the registration that they have been given, understand, and will abide by the sign regulations of this Ordinance.
F. Any other such information, as may be required by the Planning Official, filed on forms provided by the Planning Official.

3:4.14-5 Fees

All sign permit and registration applications shall be accompanied by the appropriate fee. Fees for the registration of temporary signs shall be levied per event with the exception of off-premise

directional signs which shall be levied on an annual basis. Permit and registration fees to erect, alter, or relocate a sign shall be in accordance with the fee schedule adopted by the Kershaw County Council.

3:4.14-6 Violations

Violations of the provisions of this section shall be subject to the penalties set forth in the Violations and Penalties section of the Administration article of this Ordinance.

3:4.14-7 Inspections

The building inspector shall make or require any inspections of any construction work to ascertain compliance with the provisions of this section and other laws which are in force and to ascertain that the sign is erected or displayed as indicated on the approved sign permit or registration application. The Building Official may require additional inspections for signs with complex footings or sign structure.

3:4.15 Sign Definitions

Awning - An architectural projection or shelter projecting from and supported by the exterior wall of a building and composed of a rigid or non-rigid materials and/or fabric on a supporting framework that may be either permanent or retractable. Example: A canvas covered frame extending from a building wall to an area over the sidewalk in front of a shop.

Canopy - An open-sided freestanding structure constructed of rigid materials or non-rigid materials, including but not limited to metal, wood, concrete, plastic, canvas, or glass. The structure covering the fueling area at a gas station is considered to be a canopy. Other examples include picnic shelters, gazebos, and cabanas.

Façade - The exterior wall of a building that is exposed to public view or that wall viewed by persons not within the building.

Flag - A piece of flexible material or fabric, usually rectangular, of distinctive color and design, that is used as a symbol (to show national or other allegiance) or decoration.

Frontage - The length of the property line serving as a public street right-of-way line. For lots with multiple frontages, the principal street frontage shall be the same as that to which the building is oriented.

Institutional Uses - Institutional uses include educational, religious, recreational, civic, municipal, and other non-commercial institutional uses that are allowable in any zoning district under the zoning district regulations.

Light Emitting Diodes (LEDs) - Light emitting diodes are electronic components that let electricity pass in only one direction that emit visible light when electricity is applied, much like a light bulb. When many LEDs are side-by-side, they can create pictures and movement.

Marquee - A fixed hood or awning of permanent construction which is supported solely from a building wall, and extends beyond the building. Example: The structure over the front sidewalk area at a movie theatre.

Sight Triangle - A triangular area, measured from the curb or edge of pavement, created by a line connecting points on the front and side for lines at a determined distance from the intersection of said lines or the extension of said lines. The following two types of sight triangles are used in this section:

A. **Driveway Sight Triangle** - The driveway sight triangle is one that is measured ten (10) feet along the driveway and ten (10) feet along the edge of pavement. In the event that parking is allowed adjacent to the curb, ten (10) feet will be measured along the edge of the driveway and ten (10) feet along the edge of the lane of traffic. In the event that a driveway crosses a sidewalk, ten (10) feet will be measured along the driveway and ten (10) feet along the edge of the sidewalk. Refer to illustrations in the sign measurement provisions of this section.

B. **Intersection Sight Triangle** - A triangle established by multiplying the speed limit of the road which is being accessed by ten (10). The sight distance for a speed limit of 35 MPH would be 350 feet at the intersection. The resulting intersection sight distance triangle is determined by measuring from a point fifteen (15) feet from the edge of pavement of the road being accessed to the points providing the minimum intersection sight distance in each direction.

Sign - Any structure or device designated or intended to convey information to the public in written, pictorial, or symbolic form.

Sign Copy - All words, letters, numbers, figures, characters, art work, symbols, or insignia that are used on a sign surface area.

Sign Frame Area - The sign frame area consists of the dimensions of a geometric shape formed by all supports, frames, braces, borders, and embellishments which extend beyond the sign surface area and that encloses the sign surface area and does not contain any copy, logo, advertising, name, or message.

Sign Height - The distance measured from the natural grade to the highest point of the sign face or structure, whichever is higher.

Sign Owner- The person and/or property owner receiving benefit from the sign.

Sign Structure - Any base, foundation, pedestal, pole, post, upright, brace, bracket, bar, rod, strut, dross-piece, frame, scaffold, girder, or other similar item with or without a sign thereon, designated to support the load and/or force of a sign's surface area, regardless of whether or not such items are permanently attached to the ground.

Sign Surface Area - The area inside a geometric shape enclosing any message, logo, symbol, name, photograph, or display face. All area dimensional provisions in this Ordinance are calculated from the sign surface area dimensions.

Sign, Abandoned - A sign, which relays information that is no longer pertinent or up-to-date; no longer advertises a bona fide business, lessor, owner, product, activity conducted, or product available; is located on a structure that does not contain a sign surface area; contains a sign with no message; or is located on a site which no longer has any business activity.

Sign, Animated - Any sign, or any part of a sign that changes copy or image more frequently than once every fifteen (15) seconds is considered to be animated. Included are signs that employ motion or the illusion of motion by any means (manual, electronic, mechanical, electrical, atmospheric, panels, slats, discs, or lights, etc.) to depict action or create a special effect or scene. Also included are signs that create illusions by blinking, alternating, chasing, contracting or expanding, flashing, fading, repeating, oscillating, pulsating, rotating, rolling, running, scrolling, strobing, twinkling, or simulating moving video images, etc.

Sign, Awning– A sign displayed on, or attached flat against the surface or surfaces of an awning.

Sign, Banner - A sign intended to be hung either with or without a frame, possessing characters, letters, illustrations, or ornamentation applied to flexible materials or fabric of any kind, excluding flags and emblems of corporations or political, professional, religious, or educational organizations.

Sign, Billboard - See *Off-Premise Advertising Sign*.

Sign, Building Wall - Any sign attached to a wall, painted on the wall surface, or erected and confined within the limits of an exterior wall of any building or structure, which is supported by such wall or building, and which displays only one sign surface.

Sign, Campaign - A temporary sign erected by a political candidate, group, or agent thereof, for the purpose of advertising a candidate or stating a position regarding an issue upon which the voters of the County shall vote. Also called an election sign or political sign.

Sign, Canopy - A sign displayed on, or attached flat against, the surface or surfaces of a canopy.

Sign, Changeable Copy - A sign or portions thereof with characters, letters, or illustrations that can be changed or rearranged by any means (manual, electronic, atmospheric, mechanical, remote, etc.) without altering the face or surface of the sign.

Sign, Common - A single sign frame or structure containing individual signs or logos to advertise more than one individual business, service, product, etc.

Sign, Contractors', Craftsmen's, or Construction - A common sign temporarily erected and maintained on a job site while undergoing construction by a contractor, craftsman, architect, developer, finance organization, subcontractor, or similar concern.

Sign, Dilapidated - Any sign which is not properly maintained; is insecure or otherwise structurally unsound; has defective parts in the support, guys and/or anchors; or is unable to withstand wind pressure of 100 miles per hour as determined by the Building Official and applicable regulations as provided in the applicable building codes.

Sign, Double-Sided - Two signs with parallel faces twelve (12) inches apart or less, or with faces joining at an angle of ten (10) degrees or less. For signs so arranged, only one side of the sign is to be used for computation of the sign surface area.

Sign, Drive-Thru Menu Board - A freestanding sign oriented to the drive-thru lane of a restaurant that lists the type and price of food items offered for sale at the establishment.

Sign, Easel - A sign or message board displayed on a portable open frame, the outline of which (the frame) is roughly pyramidal in shape.

Sign, Election - See *Campaign Sign*.

Sign, Existing - Any sign that was erected, mounted, or displayed prior to the adoption of this Ordinance.

Sign, Flashing - Any lighted or electrical sign which emits light in sudden transitory bursts.

Sign, Fluttering - A sign or device, all or part of which is set in motion by movement of the atmosphere, mechanical, electrical, or any other means. Such items include rotating or otherwise moving devices, whirligigs, balloons, pennants, posters, propellers, discs, ribbons, streamers, strings of light bulbs, spinners, and flags (other than flags, pennants, insignia, or symbols of any religious, governmental, non-profit or not-for-profit organization when not displayed in connection with a commercial promotion or as an advertising device) regardless of whether they contain written messages.

Sign, Freestanding - A freestanding sign is any permanently mounted sign that is placed on or anchored in the ground and that is not attached to a building or other structure. Also referred to as pole, pylon, monument, or ground signs.

Sign, Ground - See *Sign, Monument*.

Sign, Hanging - A sign that is mounted to or hung from porches, overhangs, or hanging projecting signs that may substitute for a building wall sign.

Sign, Identification - A sign which gives the nature, logo, trademark, or other identifying symbol, address, or any combination of the name, symbol, and address of a building, business, development, or establishment on the premises where it is located.

Sign, Illuminated - A sign characterized by the use of artificial light, either projecting through its surface (internally illuminated) or reflecting off its surfaces (externally illuminated).

Sign, Illumination, External - A sign characterized by the use of artificial light which reflects off its surface.

Sign, Illumination, Internal - A sign characterized by the use of artificial light projecting through its surface.

Sign, Inflatable - A sign that is either expanded to its full dimensions or supported by gasses contained within the sign or sign parts at a pressure greater than atmospheric pressure.

Sign, Interior - Any sign placed within a building, but not including window or door signs.

Sign, Marquee - A sign displayed on or attached flat against the surface or surfaces of a marquee.

Sign, Message Board - A changeable copy sign permitted only in institutional uses that is intended to provide schedules of events, rules, regulations, announcements, or similar messages excluding commercial advertisement or promotional messages. Institutional uses include educational, religious, recreational, civic, municipal, and other non-commercial institutional uses including historic markers that are allowable in any zoning district under the zoning district regulations.

Sign, Monument - A sign constructed on the ground with a continuous footing or foundation with the base of the sign at grade. Also, referred to as a ground sign.

Sign, Multiple Occupant Development - A freestanding common sign identifying the names of more than one business or activity conducted within a multiple occupant development which is controlled by a single owner, landlord, or association. Examples include shopping centers, industrial parks, and office complexes.

Sign, Nonconforming - Any sign which was legal at the time of erection or display, but as of the effective date of this Ordinance or any subsequent amendment hereto, does not conform to a provision or provisions of this section.

Sign, Off-Premise Advertising - Any sign that identifies or communicates a message related to an activity conducted, a service rendered, or a commodity sold which is not the primary activity, service, or commodity provided on the site where the sign is located. Also referred to as outdoor advertising or billboard sign.

Sign, Off-Premise Directional - A temporary sign that is displayed for a forty-eight (48) hour period only, the purpose of which is limited exclusively to the identification of a use or

occupancy located elsewhere and which tells the location of or route to such use or occupancy. Such signs are used to advertise events such as open houses, exhibits, or other recurring events.

Sign, On-Premise - Any sign that disseminates information that directly relates to the use of the property on which it is located and is not a separate and distinct use.

Sign, On-Premise Directional and Instructional - A sign, generally informational, that has a purpose secondary to the use of the lot on which it is located. Such signs include, but are not limited to: directional arrows, "No Parking," "Entrance," "Enter," "Exit," "Telephone," "Open," "Closed," and other directives. Also included are common signs indicating hours of operation, which credit cards are accepted, groups or associations to which the business belongs, or clubs or groups which utilize, recommend, inspect, or approve the business for use by its members. Not included are signs that display a commercial message.

Sign, Parked Motor Vehicle or Trailer - A permanent or temporary sign affixed to, painted on, placed in, or upon any parked vehicle or which is parked or mounted for the primary purpose of providing signs not otherwise allowed by this Ordinance.

Sign, Perimeter, Retaining Wall, or Fence - Any principal sign attached to a wall or fence, painted on the wall or fence surface, or erected and confined within the limits of a wall or fence and displays only one sign surface.

Sign, Permanent - A sign attached to a building, structure, or the ground in a non-temporary manner and made of materials intended for more than short term use.

Sign, Permitted - A sign for which a valid permit or registration has been issued.

Sign, Pole - A freestanding sign mounted on a pole.

Sign, Political - See *Campaign Sign*.

Sign, Portable - Any sign with a frame or stand designed to be transported from place to place and not permanently installed. This definition excludes restaurant menu sandwich boards and easels.

Sign, Principal - A chief or main sign containing the facility identification and/or logo that is oriented to a public right-of-way.

Sign, Projecting - A sign oriented perpendicular to a building or structure that is wholly or partly dependent upon a building or structure for support. Examples include signs over sidewalks and shingle signs.

Sign, Real Estate - A temporary sign erected by the owner or his agent advertising the real property upon which the sign is located for rent, for lease, or for sale.

Sign, Residential Subdivision Entrance - A permanent sign that identifies a subdivision or neighborhood and is located internal to and visible from the initial point of entry to a subdivision or from surrounding streets.

Sign, Roof - Any sign, sign structure, painted sign, or sign extending above or higher than the cornice of a building.

Sign, Sandwich Board - A portable sign shaped like an A-frame with a sign panel on one or both sides, where the sign panel is integral to the structure of the sign.

Sign, Special Event - A temporary sign advertising events providing a community service, events promoting the community, or in the public interest sponsored by governmental, religious, charitable, civic, fraternal, or similar non-profit or for-profit organizations.

Sign, Specific Information Service - For the purposes of this Ordinance, specific information service signs are signs placed on Interstate 20 to provide motorists with information on essential travel services (gas, food, lodging, etc.) that are available at local interchanges.

Sign, Temporary - A sign that is used only for a short period of time and is not permanently mounted.

Sign, Time and Temperature - An electrical sign utilizing lights that are going on and off periodically to display the current time and temperature.

Sign, Unlawful - Any sign that does not have a sign permit or registration, or has been installed, erected, constructed, or maintained in violation of any of the terms of this Ordinance.

Sign, Unsafe - See *Sign, Dilapidated.*

Sign, Window or Door - A sign that is applied or attached to the exterior or interior of a window or door, or located in such manner within a building that it can be seen from the public way or from adjacent property.

3:5 BUFFERING, SCREENING, OPEN SPACE, AND LANDSCAPING REGULATIONS

The regulations contained in this Article are intended generally to ensure land use compatibility, improve aesthetics, ensure adequate provision of open space, and protect trees within and throughout Kershaw County.

3:5.1 Buffer Areas

A buffer area (buffer yard) is a unit of yard, together with plantings, fences, walls, and other screening devices required thereon. The purpose of a buffer area is to ameliorate any potential negative impact between adjacent land uses and streets, and promote land use compatibility.

3:5.1-1 Applicability

Buffer areas shall be required for all proposed uses, in accord with Tables 3-13, 3-14, and 3-15. It shall be the responsibility of the proposed new use or a fifty (50) percent or more enlargement of an existing use to provide the buffer area where required by this Ordinance. This section does not preclude common walls between buildings on adjacent lots where allowable by zoning district regulations. Where property is screened by an existing building or wall, no additional buffering shall be required.

3:5.1-2 Party Responsible for Installation

Where a vacant parcel is being developed adjacent to another vacant parcel, then the developer(s) or owner(s) of the first parcel to be developed shall provide the perimeter landscaping required adjacent to the vacant land. Where a vacant parcel is being developed adjacent to an existing land use, then the developer(s) or owner(s) of the vacant parcel shall provide the perimeter landscaping required adjacent to the existing land use.

3:5.1-3 Zoning Change

If the zoning district classification for an existing use or parcel changes, then the parcel shall comply with the applicable landscaping requirements of this Article or, at a minimum, the intent

of this Article as prescribed by the Planning Official. The owner(s) or developer(s) may need to install additional plant material on the parcel in order to meet the intent of this Article, especially on developed sites, or to bring the parcel up to the standards for the type of perimeter landscaping which would be required under this Article.

3:5.1-4 Location

Buffer areas shall be located on the outer perimeter of a lot or parcel, extending to the lot or parcel boundary line. For purposes of complying with this section, buffers shall not be located on any portion of an existing street or right-of-way; however, they may occupy part or all of any required front, side, or rear yard setback. Where specified by this section, buffer areas and/or structures shall be developed as an integral part of the proposed use.

3:5.1-5 Design Standards

Five (5) types of buffer areas are required by this Ordinance; Type "A", Type "B", Type "C", Type "D", and Type "E". Note that existing vegetation may be utilized per the Existing Plant Materials provisions of this section. Significant trees shall be utilized per the Tree Protection provisions of this Ordinance. The Planning Official shall maintain a current list of tree and shrub species that shall be used to select the plant materials for the buffer areas. Alternate species not on the list must be approved by the Planning Official. A description of each buffer type follows.

A. **Type "A" Buffer Area** - The Type "A" Buffer Area consists of low density landscaping between a proposed use and the adjacent street, providing separation between the two. The buffer area shall be a minimum width of five (5) feet. Per 100 lineal feet of frontage or fraction thereof, not including driveway and walkway widths, and in consideration of visibility sight triangles, driveway sight triangles, and overhead utility lines, as applicable, the buffer area shall consist of a combination of not less than:
   1. Fifteen (15) perennial shrubs (may be clustered to ensure survival).
   2. Four (4) medium-maturing trees. Any tree planted within the right-of-way of overhead utility lines shall be a small-maturing tree of a mature height of no greater than fifteen (15) feet.
   3. Landscaped grass areas or other appropriate groundcover.

B. **Type "B" Buffer Area** - The Type "B" Buffer Area is a low-medium density screen intended to obscure visual contact between uses and to create spatial separation. Type "B" Buffer areas are used as street and perimeter buffers per Tables 3-13, 3-14, and 3-15. The buffer area shall be a minimum width of fifteen (15) feet. Per 100 lineal feet or fraction thereof, not including driveway and walkway widths, the screen shall consist of a combination of not less than:
   1. Two (2) large-maturing shade trees planted forty (40) to sixty (60) feet on center.
   2. Three (3) evergreen trees.
   3. Three (3) medium-maturing trees.
   4. Twenty-five (25) perennial shrubs.
   5. Landscaped grass areas or other appropriate groundcover.

   Tree requirement exception: Any tree planted within the right-of-way of overhead utility lines shall be a small-maturing tree of a mature height of no greater than fifteen (15) feet.

C. **Type "C" Buffer Area** - The Type "C" Buffer Area is a medium-high density screen intended to exclude all visual contact between uses and to create spatial separation. The buffer area shall be a minimum width of twenty (20) feet. Per 100 lineal feet or fraction

thereof, not including driveway and walkway widths, the screen shall consist of a combination of not less than:

1. Two (2) large-maturing shade trees planted forty (40) to sixty (60) feet on center.
2. Ten (10) to twelve (12) evergreen trees and four (4) to six (6) medium-maturing trees planted alternately in double staggered rows twelve (12) to fourteen (14) feet on center.
3. Twenty-five (25) perennial shrubs.

Tree requirement exception: Any tree planted within the right-of-way of overhead utility lines shall be a small-maturing tree of a mature height of no greater than fifteen (15) feet.

D. **Type "D" Buffer Area** - The Type "D" Buffer Area is a high density screen designed to provide maximum buffering and screening, to exclude all visual contact between uses, and to create spatial separation. The buffer area shall be a minimum width of thirty (30) feet. Per 100 lineal feet or fraction thereof, not including driveway and walkway widths, the screen shall consist of a combination of not less than:

1. Three (3) large-maturing shade trees planted twenty (20) to forty (40) feet on center.
2. Sixteen (16) to eighteen (18) evergreen trees and seven (7) to nine (9) medium-maturing trees planted in triple-staggered rows twelve (12) to fourteen (14) feet on center.
3. Forty (40) perennial shrubs.

Tree requirement exception: Any tree planted within the right-of-way of overhead utility lines shall be a small-maturing tree of a mature height of no greater than fifteen (15) feet.

E. **Type "E" Buffer Area** - The Type "E" Buffer is a residential street buffer required for all new planned residential subdivisions. Planned subdivisions include major subdivisions, large acreage residential subdivisions, and planned development districts. The buffer area shall be, on average, between five (5) and ten (10) feet in width. Per 100 lineal feet of frontage or fraction thereof, not including driveway and walkway widths, and in consideration of visibility sight triangles and driveway sight triangles, as applicable, the buffer area shall consist of:

1. Three (3) large-maturing shade trees.
2. Landscaped grass areas or other appropriate groundcover.

Exception: Any tree planted within the right-of-way of overhead utility lines shall be a small-maturing tree of a mature height of no greater than fifteen (15) feet. If seventy-five (75) percent of the street frontage lies within the right-of-way of overhead utility lines, one additional small-maturing tree per 100 linear feet of frontage shall be provided.

Table 3-12 BUFFER WIDTH AND PLANT MATERIAL REQUIREMENTS

	Type "A"	**Type "B"**	**Type "C"**	**Type "D"**	**Type "E"**
Minimum Width	5 feet	15 feet	20 feet	30 feet	5-10 feet
Perennial Shrubs	15	25	25	40	Optional
Trees, Medium-Maturing	4	3	4-6	7-9	Optional
Trees, Large-Maturing	Optional	2	2	3	3*
Trees, Evergreen	Optional	3	10-12	16-18	Optional
Groundcover	Landscaped Grasses or Appropriate Groundcover	Landscaped Grasses or Appropriate Groundcover	Optional	Optional	Landscaped Grasses or Appropriate Groundcover

Note: Any tree planted within the right-of-way of overhead utility lines shall be a small-maturing tree of a mature height of no greater than fifteen (15) feet.
* If 75% of street frontage lies within the right-of-way of overhead utility lines, one additional small-maturing tree per 100 linear feet of frontage shall be provided.

3:5.1-6 Specifications

A. **Minimum Installation Size** - At installation or planting, all plant material shall meet the following specifications:
   1. Shrubbery shall be a minimum three (3) gallon container size.
   2. All evergreen and medium-maturing trees used to fulfill buffer area requirements shall be no less than ten (10) gallon container size or one and one-half (1½) inch caliper, balled and burlapped.
   3. All large-maturing trees shall be not less than fifteen (15) gallon container size or two (2) inch caliper, balled and burlapped.
   4. Plant material shall be sufficiently large and planted in such a fashion that a year-round screen is produced within three (3) growing seasons.
   5. All plant material shall comply with ANSI Z60.1-2004: American Standard for Nursery Stock – American Nursery & Landscape Association.

B. **Minimum Mature Size** - Plant material shall be selected that will meet the following specifications at maturity:
   1. Evergreen plant material and medium-maturing trees used for screening shall form a continuous opaque screen with a minimum average of twenty-five (25) feet in height.
   2. Deciduous large-maturing trees used for screening shall attain a minimum average of thirty-five (35) feet in height.
   3. Any tree planted within the right-of-way of overhead utility lines shall be a small-maturing tree of a mature height of no greater than fifteen (15) feet.

C. **Staggered Planting -** Arrangement of plantings in buffers shall provide protection to adjacent properties. Possible arrangements include planting in parallel, serpentine, or broken rows. Where required, evergreen and deciduous plant material shall be planted in at least two (2) rows and in an alternating fashion to form a continuous opaque screen of plant material.

D.

Table 3-13 PERIMETER BUFFER AREA REQUIREMENTS: PROPOSED NON-RESIDENTIAL USES				
Proposed Non-Residential Uses (in Specific Zoning Districts)	**Existing Uses (In All Zoning Districts)**			
	Single-Family, Cemeteries	Duplex, Triplex, Quadruplex	Multi-Family, Manufactured Home Parks	Vacant Property Zoned Residential
R-15, R-10, R-6 - Institutional Uses	C	B	B	C
O-I	C	B	B	C
B-2	D	C	C	D
B-3	C	B	B	B
I-1	D	D	D	D
GD – Manufacturing Uses	D	D	D	D
GD – Large Retail and Wholesale Uses	D	C	C	D
GD – Office, Small Retail	D	C	B	C
GD – All Other Uses	D	C	C	D
RD-1, RD-2, MRD-1	C	B	B	C

Table 3-14 PERIMETER BUFFER AREA REQUIREMENTS: PROPOSED RESIDENTIAL USES				
	Existing Uses (In All Zoning Districts)			
Proposed Use	Single-Family	Duplex, Triplex, Quadruplex	Multi-Family, Manufactured Home Parks	Vacant Property Zoned Residential
Single-Family	None	C*	C*	None
Duplex, Triplex, Quadruplex	C	None	B	C
Multi-Family	C	B	None	C
Manufactured Home Parks	D	C	B	D
* Applies to single-family residential developments locating adjacent to duplex, triplex, and quadruplex developments, or apartment complexes and manufactured home parks.				

Table 3-15 STREET BUFFER TYPE REQUIREMENTS: PROPOSED RESIDENTIAL AND NON-RESIDENTIAL USES	
Proposed Residential Use	**Street Buffer Type Required**
Single-Family	E
Duplex, Triplex, Quadruplex	A
Multi-Family	A
Manufactured Home Parks	B
Proposed Non-Residential Uses (in Specific Zoning Districts)	**Street Buffer Type Required**
R-15, R-10, R-6 -Institutional Uses	A
O-I	A
B-2	B
B-3	A
I-1	B
GD - Manufacturing Uses	B
GD - Large Retail and Wholesale Uses	B
GD - Office, Small Retail	A
GD - All Other Uses	B
RD-1, RD-2, MRD-1	A
Note: All street buffers shall be designed in consideration of visibility at driveway sight triangles, intersection sight triangles, and overhead utility lines, as applicable.	

3:5.1-7 Substitutions and Variations

The following substitutions and variations shall satisfy the requirements of this section:

A. **Existing Plant Materials** - The use of existing trees or shrubs to satisfy the perimeter landscaping requirements of this section is strongly encouraged. Existing significant vegetation within the required perimeter landscaped area shall be preserved and credited towards standards for the type of perimeter landscaping required unless otherwise approved by the Planning Official at the time of the site plan approval. Refer to the Tree Protection provisions of the Land Development Design Standards and Required Improvements section in Article 5 of this Ordinance.

B. **Fence or Wall** - Where, owing to existing land use, lot sizes or configurations, topography, or circumstances peculiar to a given piece of property, the buffer area requirements of this section cannot reasonably be met, fences and walls may be utilized as buffer area substitutions for non-street buffers.

   All fences and walls used as part of the buffer area requirements must have a finished side that is facing the adjoining property. The interior side of the fence or wall may be finished as the owner deems appropriate. Walls may be brick or masonry. Plain concrete block walls must be rendered with decorative facing such as stucco, brick veneer, etc. Stockade fences (with spaces between the boards) are not allowed. All wood fences must be stained or painted. Chain link, wire, or other fences that do not create a visible barrier are not allowed.

   The following substitutions can be made:

   1. **Substitution for Type "B" Buffer** - The developer may request, and the Planning Official may approve, the substitution of appropriate screening for Type "B" Buffer areas. The substitution may consist of the following:

a. An eight (8) foot fence or wall structure installed at least five (5) feet off of the side or rear property line; and
b. Ten (10) shrubs per 100 feet planted on the finished side facing the adjoining property; and
c. Two (2) medium-maturing trees or two (2) evergreen trees per 100 feet planted on the finished side facing the adjoining property.

2. **Substitution for Type "C" Buffer** - The developer may request, and the Planning Official may approve, the substitution of appropriate screening for Type "C" Buffer areas. The substitution may consist of the following:
   a. An eight (8) foot fence made of sound barrier material or an eight (8) foot brick or masonry wall installed at least five (5) feet off side or rear property line; and
   b. Ten (10) shrubs per 100 feet planted on the finished side facing the adjoining property; and
   c. Two (2) medium-maturing trees or two (2) evergreen trees per 100 feet planted on the finished side facing the adjoining property.
3. **Substitutions for Type "D" Buffers** - The developer may request, and the Planning Official may approve, the substitution of appropriate screening for Type "D" Buffer areas in the way of a fence or wall structure incorporated into the required side or rear buffer areas of the proposed use in accord with the following:
   a. An (8) foot fence made of sound barrier material or an eight (8) foot brick or masonry wall may be approved as a substitution for a maximum of one-half of the required buffer area (i.e. fifteen feet) if incorporated in conjunction with Type "D" Buffer plantings.

C. **Berms** - Berms may be included in buffer area design for Type "B" and Type "C" Buffer areas as approved by the Planning Official in consideration of site conditions:
1. Berms of a minimum height of three (3) feet with plantings resulting in a total height of at least eight (8) feet at maturity. The required buffer type plantings may be reduced by fifty (50) percent.
2. Berms of a minimum height of three (3) feet with a wall or fence (sound barrier fence for Type "C" Buffer areas) for a total height of at least eight (8) feet.
3. Berms of a minimum height of eight (8) feet shall not require buffer type plantings, fences, or walls.
4. Berms may be approved for incorporation into Type "D" Buffer areas in conjunction with Type "D" Buffer plantings on a case by case basis.
5. All berms shall not exceed a slope with maximum rise of one (1) foot to a run of three (3) feet (expressed as a one to three [1:3] ratio or thirty-three [33] percent slope). All berms, regardless of size shall be stabilized with a groundcover or other suitable vegetation.

D. **Distance/Depth** - Where added depth (width) to the buffer area is proposed, the number of required evergreen plants may be reduced at a rate of one (1) per two (2) feet of additional buffer area (over the minimum required). The number of required evergreen plants may not be reduced more than forty (40) percent by adding increased depth.

E. **Alternate Design** - Where, owing to existing land use, lot sizes or configurations, topography, or circumstances peculiar to a given piece of property, the buffer area requirements of this section cannot reasonably be met, or where a site-specific alternate design would result in an aesthetically superior landscape design, substitution of plant material or placement may be approved by the Planning Official or the Planning and Zoning

Commission, as applicable, providing that the alternate design meets the intent of this Ordinance.

3:5.1-8 Required Maintenance

The maintenance of required buffer areas including fences, walls, and/or berms shall be the responsibility of the property owner. All such areas shall be properly maintained so as to ensure continued buffering. Landscaped areas shall be pruned, cleaned, and weeded regularly. All planted areas shall be provided with an irrigation system or a readily available water supply to ensure continuous healthy growth and development. Drought resistant native or adapted species may be supplied with temporary irrigation systems that can be removed after the plants are established (minimum of two [2] years). Otherwise, permanent irrigation systems shall be installed.

Dead or diseased plants shall be removed and replaced. Replacement plants shall be of similar type. All replacement shrubbery shall be a minimum three (3) gallon container size and all replacement evergreen and medium-maturing trees shall be no less than ten (10) gallon container size or one and one-half (1½) inch caliper, balled and burlapped; and all large-maturing trees shall be not less than fifteen (15) gallon container size or two (2) inch caliper, balled and burlapped. Other replacement plants shall be of similar type and size. Debris and litter shall be cleared. Berms, fences, and walls shall be maintained and kept in good repair at all times. Failure to do so is a violation of this Ordinance, and shall be remedied in the manner prescribed for under the violations provisions of this Ordinance.

3:5.1-9 Use of Buffer Areas

A buffer area may be used for passive recreation; however no tree may be removed except as specified herein. Freestanding signs which have been properly permitted may be installed in buffer yards. All other uses are prohibited, including off-street parking. To prevent damage to existing trees, overhead power lines and underground pipes cannot be installed in existing buffer yards. With approval of the Planning Official, such pipes may cross, but not run longitudinally within the buffer yard.

3:5.1-10 Easements

No vegetative screening or fencing required in this section shall be planted or installed inside utility and drainage easements, excluding overhead easements, without the consent of the Planning Official and the easement holder. If plantings or fences inside utility or drainage easement areas are allowed, these plantings and fences shall be maintained in accordance with the terms of consent and any applicable maintenance provisions of this Ordinance. Any tree planted within the right-of-way of overhead utility lines shall be a small-maturing tree of a mature height of no greater than fifteen (15) feet.

3:5.1-11 Visibility at Intersections

All street buffers shall be designed in consideration of applicable visual clearance areas within driveway site triangles and roadway intersection site triangles.

A. **Visual Clearance Area -** An area with a height of between two and one-half (2½) feet and ten (10) feet, measured from the upper edge of the curb or pavement, and located within an intersection or driveway sight triangle, where no sign, planting, fence, building, wall, or other

structure shall be located. Exception: Poles and support structures less than twelve (12) inches in diameter may be permitted in such areas.

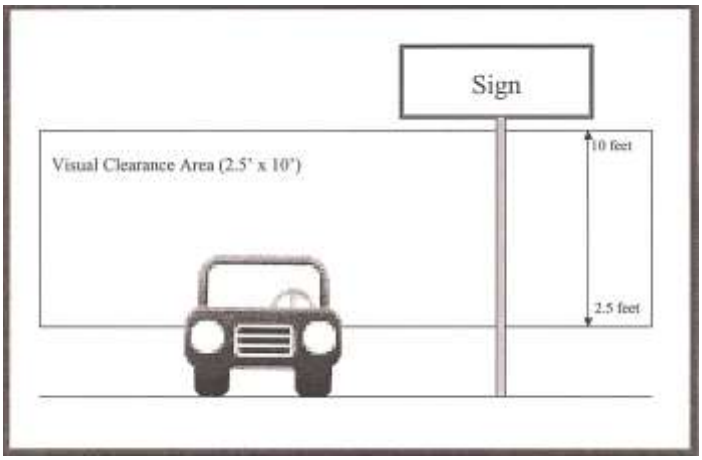

Visual Clearance Area

B. **Sight Triangle -** A triangular area, measured from the curb or edge of pavement, created by a line connecting points on the front and side for lines at a determined distance from the intersection of said lines or the extension of said lines. The following two types of sight triangles are used in this Ordinance:

1. **Intersection Sight Triangle -** A triangle established by multiplying the speed limit of the road which is being accessed by ten (10). The sight distance for a speed limit of 35 MPH would be 350 feet at the intersection. The resulting intersection sight distance triangle is determined by measuring from a point fifteen (15) feet from the edge of pavement of the road being accessed to the points providing the minimum intersection sight distance in each direction.

Intersection Sight Triangle for Road with 35 MPH Speed Limit

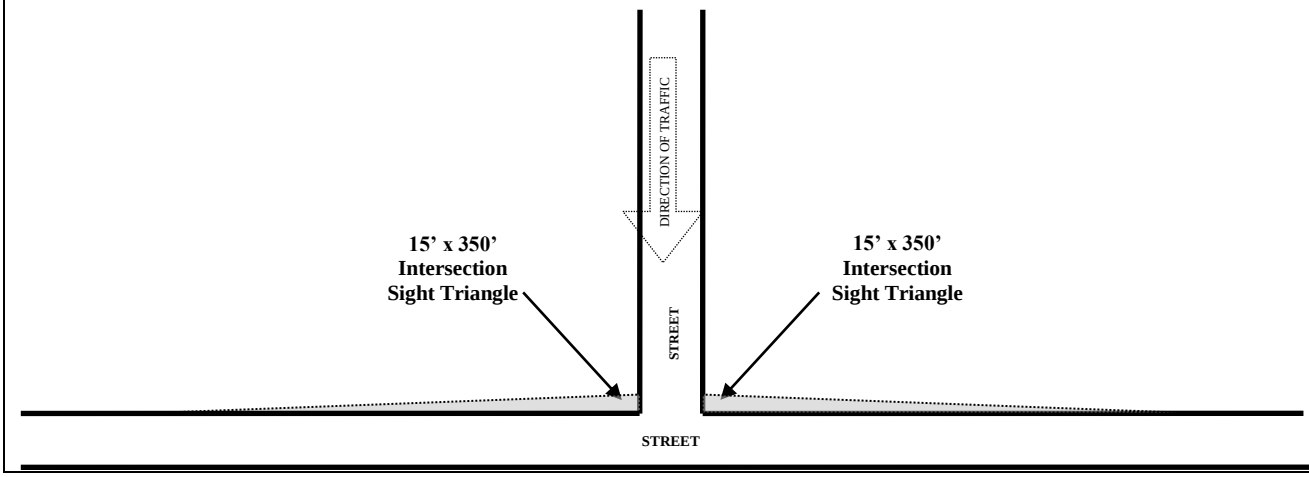

2. **Driveway Sight Triangle** - The driveway sight triangle is one that is measured ten (10) feet along the driveway and ten (10) feet along the edge of pavement. In the event that parking is allowed adjacent to the curb, ten (10) feet will be measured along the edge of the driveway and ten (10) feet along the edge of the lane of traffic. In the event that a driveway crosses a sidewalk, ten (10) feet will be measured along the driveway and ten (10) feet along the edge of the sidewalk.

Driveway Sight Triangles for Streets with No Parking Spaces or Sidewalks

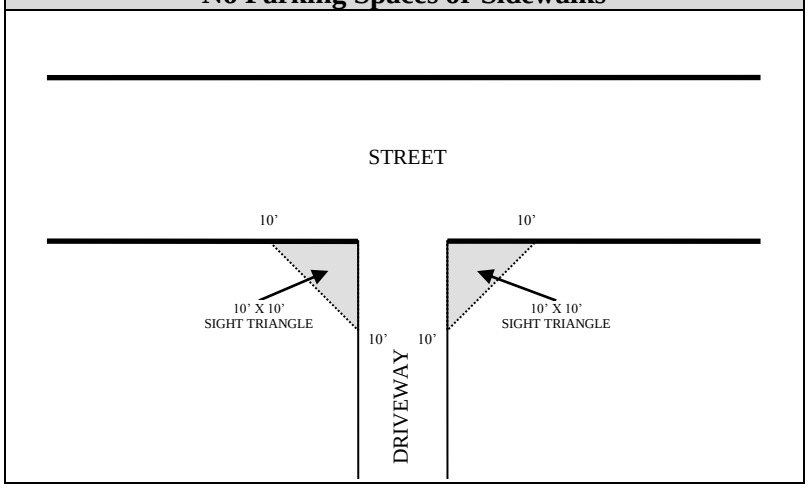

Driveway Sight Triangles for Streets with Parking Spaces

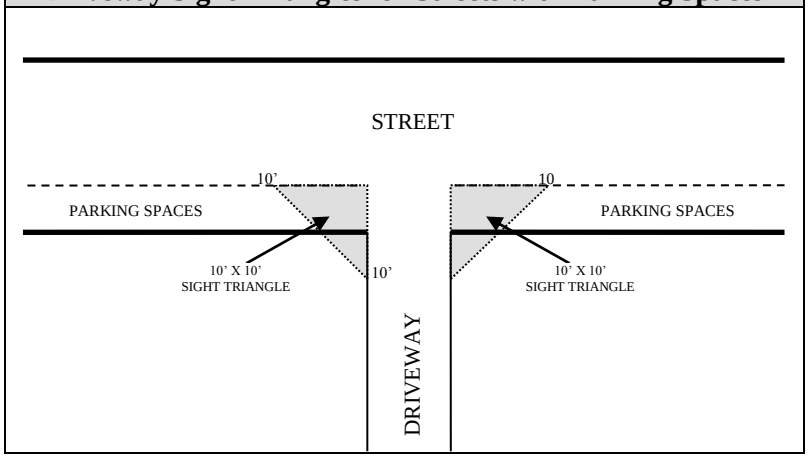

Driveway Sight Triangles for Streets with Sidewalks

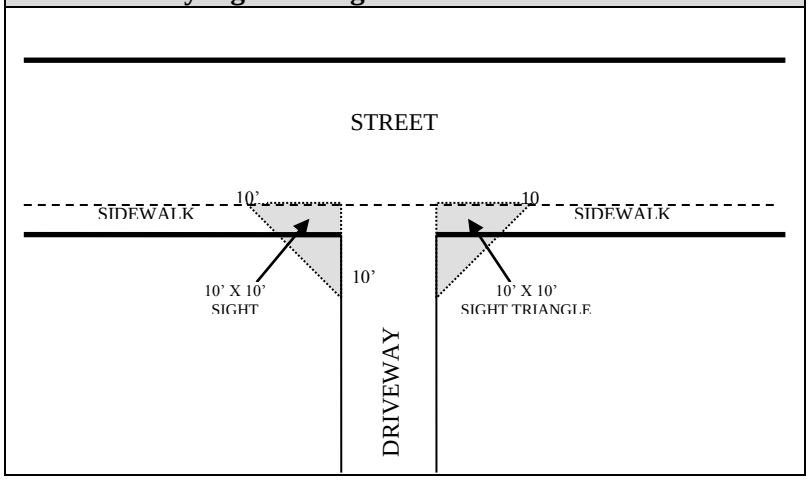

3:5.2 Screening

Screening is a type of buffer that is designed to block or obscure a particular element or use from view. The purpose of screening is to minimize, if not eliminate entirely, the visual impact of potentially unsightly open storage areas and refuse disposal facilities.

3:5.2-1 Where Required

Screening specified by this section shall be required of all open storage areas not devoted to retail sales visible from any public street or adjoining properties with which buffer areas are required. Areas requiring screening include open storage areas for shipping containers, building materials, appliances, trash containers of four (4) or more cubic yards, salvage materials, and similar unenclosed uses.

3:5.2-2 Type Screening Required

Screening shall be accomplished by an opaque divide not less than eight (8) feet in height. Screening may be accomplished by the use of sight-obscuring plant materials (generally evergreens), earth berms, walls, fences, proper siting of disruptive elements, building placement, or other design techniques approved by the Planning Official.

3:5.3 Non-Residential Landscaping

3:5.3-1 Where Required

No proposed commercial, institutional, industrial or other non-residential use shall hereafter be established unless landscaping is provided in accord with the provisions of this Article. No existing building, structure, or vehicular use area shall be enlarged by fifty (50) percent or more unless the minimum landscaping required by the provisions of this Article is provided throughout the building site. Enlargement involving twenty (20) to fifty (50) percent of the existing building shall meet the minimum requirements for the enlargement only. Enlargement involving less than twenty (20) percent shall not be required to meet the landscaping requirements provided herein.

3:5.3-2 Landscaping Plan

A landscaping plan shall be included in the zoning and land development site plan submitted with the land development permit and building permit applications. The landscaping plan may be incorporated into a site plan prepared to meet additional requirements of this Ordinance.

Required landscaping shall be provided as follows:

A. Along the outer perimeter of a lot or parcel, where required by the buffer area provisions of this Article, to buffer and separate incompatible land uses;
B. the street buffer;
C. to provide any required screening; and
D. within the interior of the site.

3:5.3-3 Cluster Developments

Non-residential cluster developments shall meet the sixty (60) percent open space requirements of the Conservation Subdivision and Group Development Design provisions of this Ordinance.

The plan shall:

A. Designate areas to be reserved for landscaping. The specific design of landscaping shall be sensitive to the physical and design characteristics of the site.
B. Indicate the location and dimensions and type of landscaped areas, plant materials, decorative features, hardscape areas (driveways, walkways, parking, etc.), utility lines, etc.
C. Identify all existing pine trees of twenty (20) inches or greater diameter at breast height (DBH) and all other tree species of eight (8) inches or greater DBH in the required setback (yard) areas, buffer areas, screening, interior landscaping, and open space areas per the Tree Protection provisions of the resource conservation regulations of this Ordinance.

3:5.3-4 Interior Landscaping

Within the interior, large parking lots with an unbroken expanse of pavement shall be avoided to the extent practicable by breaking the lot into small sections with internal planting areas (landscape islands) that feature trees planted in mulched bed areas or other ornamental landscaping. Parking lots shall be designed as a series of smaller areas that provide parking space for no more than thirty (30) automobiles for double-sided parking and fifteen (15) automobiles for single-sided parking. These smaller parking areas shall be separated by landscape islands which shall be designed in consideration of automobile overhang so as to avoid damage to plantings. The Planning Official shall maintain a current list of tree and shrub species that shall be used to select the plant materials for interior landscaped areas. Alternate species not on the list must be approved by the Planning Official.

A. **Off-Street Parking Area Landscaping** - Off-street parking area landscaping shall meet the following requirements:
    1. A minimum of one (1) large maturing tree shall be provided for every ten (10) parking stalls.
    2. No off-street parking space may be located more than sixty (60) feet from the trunk of a large-maturing tree.
    3. Significant trees shall be utilized per the Tree Protection provisions of Article 5.
    4. The use of existing trees is encouraged.
    5. Large-maturing shade trees, evergreen, or deciduous trees of a species with an expected mature height of at least forty-five (45) feet and an expected crown spread of twenty-five (25) feet shall be provided.

6. Such trees shall be planted in an area with at least 200 square feet of rooting space.
7. During site grading activities, any topsoil removed shall be segregated until it is placed in the tree planting space and used as a planting medium.
8. No tree may be planted closer than five (5) feet to the back of a curb or the paved portion of the parking lot.

B. **Screening for Parking Areas Located Adjacent to a Public Street** - Parking area screening is required in conjunction with street buffer landscaping. Screening shall be no less than five (5) feet in width and no more than four (4) feet in height. Screening can be composed of:
   1. **Masonry Walls** - Plain concrete block must be rendered with decorative facing such as stucco, brick veneer, etc.
   2. **Wood Fences** - Stockade fences and unpainted or unstained fences are not allowed.
   3. **Landscaped Berms** - Berms may incorporate the plantings required for Type "A" or Type "B" street buffers.
   4. **Landscape Islands** - Landscape islands shall be at least five (5) feet in width, and shall contain the required street buffer trees, and be planted with shrubbery with no openings between shrub plantings. Shrubs shall be evergreen species locally adapted to the area. Landscape islands and berms shall be designed in consideration of automobile overhang so as to avoid damage to plantings. Note that landscape islands which contain large maturing trees must provide for a minimum of 200 square feet of rooting space.
   5. **Alternate Combinations** - Alternate combinations that effectively screen the parking area from the public street and that are in character with neighboring development may be approved by the Planning Official.

C. **Other Interior Landscaping -** Elsewhere in the interior, landscaped areas shall be designed to soften and complement the building site. Landscaping along ten (10) percent of the exterior building walls and structures is required to separate the building from the vehicular surface area. Rooftop runoff shall be directed to pervious areas of the site to allow natural infiltration versus direct discharge into the stormwater conveyance system. To accomplish this, a minimum three (3) foot wide vegetative strip separating the rooftop downspout discharge points and impervious pavement shall be provided to receive the required ten (10) percent landscaping. Splash blocks or level spreaders shall be utilized at the downspout discharge points to promote sheet flow across the vegetative strip and facilitate infiltration.

   Landscaped areas shall equal at least ten (10) percent of the total lot/parcel area. Required perimeter and street buffer area landscaping may provide up to fifty (50) percent of this requirement.

3:5.3-5 Signage Landscaping

A. **Multiple Occupant Development Directory Signs -** If sign is not located in a required buffer yard, the base of the sign shall be landscaped with mulch or turf and low profile plantings such as shrubs, ornamental grasses, or flowers. Such landscaping shall equal the total surface area of the sign face and shall be regularly maintained in good condition.

B. **Outdoor Drive-Thru Menu Boards** - The base of the menu board shall be landscaped and/or incorporated into the landscaping plan.

C. **Residential Subdivision Signs -** Where a single ground sign is erected, such sign shall have a minimum of fifty (50) square feet of landscaped area at the base of the sign. Where two (2) ground signs are erected, each sign shall have a minimum of twenty-five (25) square feet of landscaped area at the base of each sign.

3:5.3-6 Required Maintenance

The maintenance of required landscaped areas shall be the responsibility of the property owner. All such areas shall be properly maintained so as to assure their long-term survival and aesthetic value, and shall be provided with a regular and adequate application of water via an irrigation system or a readily available water supply to ensure continuous healthy growth and development. Stormwater runoff shall be utilized to the maximum extent practicable for landscaping irrigation. Dead or diseased plants shall be removed and replaced. Replacement trees shall be of a similar type. All replacement shrubbery shall be a minimum three (3) gallon container size; all replacement evergreen and medium-maturing trees shall be no less than ten (10) gallon container size or one and one-half (1½) inch caliper, balled and burlapped; and all large-maturing trees shall be not less than fifteen (15) gallon container size or two (2) inch caliper, balled and burlapped. Other replacement plants shall be of similar type and size. Debris and litter shall be cleared. Berms, fences, and walls shall be maintained and kept in good repair at all times. Failure to monitor such areas is a violation of this Ordinance, and shall be remedied in the manner prescribed for other violations.

3:5.4 Residential Common Open Space

Common open space is land and/or water bodies used for recreation, amenity, or buffer. The purpose of this section is to ensure adequate open space for single-family and high density residential development; to integrate recreation, landscaping, greenery, and/or natural areas into such projects; to promote the health and safety of residents of such projects; to compensate for the loss of open space inherent in single-family and multi-family residential projects; and to aid in stormwater management.

The open space shall be freely accessible to all residents and property owners of a development, where required by this Ordinance. Open space shall not be occupied by buildings or structures other than those in conjunction with the use of the open space including roads and parking. Common open space shall not be included in the area calculated to meet minimum lot area requirements. Parking areas within the common open space area to accommodate open space amenities shall not be calculated to meet site parking area requirements.

3:5.4-1 Where Required

A. **Open Space Requirements for Major Subdivision Residential Developments -** Open space shall be reserved for active or passive recreation where such reservations would be appropriate. Each reservation shall be of suitable size, dimension, topography, and general access for the particular purposes envisioned by the applicant and the Planning and Zoning Commission. These areas shall be shown on the sketch plan, preliminary plans, and final plats and shall be marked "reserved for recreation open space." Provisions for the maintenance of the open space shall be stipulated prior to approval. Kershaw County will not assume responsibility of the maintenance of the open space. The total number of acres to be reserved in open space area(s) shall be determined in accordance with the following formula which has been prepared on the basis of providing approximately three (3) acres (130,608 square feet) for every 100 one-acre dwelling unit lots:

   130,680 ÷ A = OS
   A = Average square feet of subdivision lot (total square feet of all lots ÷ number of lots)

OS = Percent of total acreage of development site required to be set aside for open space

Example: Average lot size = 18,000 ft sq.
130,680 ÷ 18,000 = 7.26%

If the total site development acreage were 150 acres, then 10.89 acres (150 x 7.26%) acres of open space would be required.

For that same 150 acre site with an average lot size of 60,000 square feet, 3.27 acres of open space would be required. 130,680 ÷ 60,000 = 2.18% 150 x 2.18% = 3.27 acres

B. **Multifamily and High-Density Residential -** The following uses/projects consisting of eight (8) or more units shall provide common open space in the amounts prescribed:

Table 3-16 COMMON OPEN SPACE: AMOUNT REQUIRED	
Proposed Uses/Projects	**Ratio (% of Lot)**
Townhouse Projects	15
Manufactured Home Parks	20
Multi-Family Projects	20

C. **Cluster Developments -** Residential cluster developments shall meet the sixty (60) percent open space requirements of the Conservation Subdivision and Group Development Design provisions of this Ordinance.

D. **Planned Development Districts -** Open space requirements shall be per the approved development plan or meet the minimum requirements for the corresponding residential and/or non-residential uses of this Ordinance.

Note: Landscaped buffer areas provided to meet the requirements for multi-family projects and mobile/manufactured home parks may not be applied toward meeting the above requirements.

3:5.4-2 Applicability of Open Space Requirements

A. **New Sites -** No proposed development, building, or structure in connection with the above shall hereafter be erected or used unless common open space is provided in accord with the provisions of this section.

B. **Existing Sites -** No existing development, building, or structure in connection with the above shall be expanded or enlarged unless the minimum common open space required by the provisions of this section are provided to the extent of the alteration or expansion.

3:5.4-3 Common Open Space Plan

Proposed uses/projects and residential subdivisions shall submit an open space or landscaping plan as part of the application for a building permit. The plan shall:

A. Designate areas to be reserved as open space. The specific design of open space shall be sensitive to the physical and design characteristics of the site.

B. Designate the type of open space which will be provided, and indicate the location of plant materials, decorative features, recreational facilities, etc.

C. Specify the manner in which common open space shall be perpetuated, maintained, and administered.

3:5.4-4 Types of Common Open Space and Required Maintenance

The types of common open space which may be provided to satisfy the requirements of this Ordinance together with the maintenance required for each are as follows:

A. **Natural Areas -** Natural areas are areas of undisturbed vegetation or areas replanted with vegetation after construction. Woodlands and wetlands are specific types of natural areas. Maintenance is limited to removal of litter, dead trees, plant materials, and brush. Natural watercourses are to be maintained as free-flowing and devoid of debris. Stream channels shall be maintained so as not to alter floodplain levels.

B. **Recreational Areas -** Recreational areas are designed for specific active recreational uses such as tot lots, tennis courts, swimming pools, ball fields, and similar uses. Recreational area shall be accessible to all residents of the development. Maintenance shall ensure that there exist no hazards, nuisances, or unhealthy conditions.

C. **Greenways -** Greenways are linear green belts linking residential areas with other open space areas. These greenways may contain bicycle paths, footpaths, and bridle paths. Connecting greenways between residences and recreational areas are encouraged. Maintenance is limited to a minimum of removal and avoidance of hazards, nuisances, or unhealthy conditions.

D. **Landscaped areas, lawns, and required buffer areas,** including creative landscaped areas with gravel and tile, so long as the tile does not occupy more than two (2) percent of the required open space. Lawns, with or without trees and shrubs, shall be watered regularly to ensure survival, and mowed regularly to ensure neatness. Landscaped areas shall be pruned, cleaned, kept free of weeds, and watered regularly.

E. **Conservation Design Subdivision and Group Development Projects -** Open space areas identified as agriculturally, environmentally, or ecologically significant shall be governed per the conservation design subdivision and group development provisions of this Ordinance.

3:5.4-5 Preservation of Open Space

Land designated as common open space may not be separately sold, subdivided, or developed. Open space areas shall be maintained so that their use and enjoyment as open space are not diminished or destroyed. Open space areas may be owned, preserved, and maintained as required by this section by any of the following mechanisms or combinations thereof:

A. Common ownership of the open space by a homeowner's association which assumes full responsibility for its maintenance.

B. Deed restricted private ownership which shall prevent development and/or subsequent subdivision of the open space land and provide the maintenance.

C. Open space in a conservation design subdivision and group development design project must be held in a conservation easement.

In the event that any private owner of open space fails to maintain same, the County may in accordance with the open space plan and following reasonable notice, demand that deficiency of maintenance be corrected, and enter the open space to maintain same. The cost of such maintenance shall be charged to those persons having the primary responsibility for maintenance of the open space.

3:5.4-6 Residential Major Subdivision Reverse Frontage Lots

Residential major subdivisions, where proposed for areas adjacent to arterial streets and roads, shall be denied direct access to, and shall be separated from such streets and roads by reverse frontage lots. Elsewhere, double frontage lots shall be prohibited.

Residential reverse frontage lots shall have a minimum rear yard of fifty (50) feet next to the arterial street, measured from the shortest distance of the proposed back building line to the street right-of-way, and shall within such rear yard and immediately adjacent to the right-of-way, have a non-access planting screen easement of at least thirty (30) feet in depth planted to Type "D" Buffer requirements per this Article.

3:5.5 Utilization of Buffers, Screening and Open Space for Stormwater Management

To the greatest extent practicable, vegetative buffers, screening, and open space areas shall be designed to assist in the minimization of off-site stormwater runoff. Stormwater runoff shall be utilized to the maximum extent practicable for landscaping irrigation. Vegetative swales and bioretention cells can be incorporated into buffer, screening, interior landscaping, and open space design as a means of diverting, retaining, and treating stormwater.

3:5.6 Definitions

Berm - Any hill or slope which represents a change of elevation of at least twenty-five (25) percent (4:1 slope) and a maximum of thirty-tree (33) percent (3:1 slope), and which is covered with an appropriate stabilizing vegetation.

Caliper - The diameter of a trunk of a nursery-grown tree or immature tree to be transplanted on the site measured at six (6) inches above the top of the root mass.

Cluster Development - A form of development that permits a reduction in lot area and/or bulk requirements, providing that the total project density is comparable to the density permitted under a conventional development.

Diameter at Breast Height (DBH) - The standard measure of tree diameter for trees existing in place on a site. The tree trunk is measured four and one-half (4½) feet above the ground. If the tree splits into multiple trunks below four and one-half (4½) feet, the trunk is measured at its most narrow point beneath the split.

Easement - A right-of-way granted, but not dedicated, for limited use of private land for a public or quasi-public purpose and within which the owner of the property shall not erect any permanent structures.

Lot, Reverse Frontage - A double frontage lot extending between, and having frontage on, an arterial street and a minor street, and with vehicular access solely from the minor street.

Native and Adapted Plants - Native plants are plants that were growing in this region prior to European settlement. Adapted plants are plants that have been introduced to the region that grow reliably well. Native and adapted plants require minimal attention from humans in the form of winter protection, pest treatment, water irrigation, or fertilization once the root systems are established in the soil. Native and adapted plants are considered to be low maintenance but not invasive.

Shrub - Any hard-wooded perennial plant of a species which normally reaches a height between twelve (12) inches and eight (8) feet, which is between eighty (80) and 100 percent opaque at maturity.

Tree - A usually tall, woody plant, distinguished from a shrub by having comparatively greater size and longevity.

Tree, Evergreen - A tree which retains its foliage for the majority of the year. Examples include most conifers such as pines, hollies, and cedars.

Tree, Large Maturing - A single trunk tree whose canopy dimensions have the potential to reach at least forty-five (45) feet tall and twenty-five (25) feet wide at maturity.

Tree, Medium Maturing - A single trunk tree whose canopy dimensions that have the potential to reach at least twenty-five (25) feet tall and twenty (20) feet wide at maturity.

Tree, Small Maturing - Single trunk or multi-stem dimensioned trees that have the potential to reach at least fifteen (15) feet tall and fifteen (15) feet wide at maturity.

3:6 OFF-STREET PARKING REGULATIONS

The provisions of this section shall supplement the off-street parking requirements contained in Table 3-3 of this Ordinance. Table 3-3 lists minimum parking requirements per single-occupancy use.

3:6.1 Off-Street Parking

3:6.1-1 General Requirements

A. Where application of the requirements of Table 3-3 results in a fractional space requirement, the next larger requirement shall apply.
B. Wherever a building or use, constructed or established after the effective date of these regulations is changed or enlarged in floor area, number of dwelling units, seating capacity, or otherwise to create a need for an increase of ten (10) percent or more in the number of existing parking spaces, such spaces shall be provided on the basis of the enlargement or change.
C. In determining the parking requirements for multiple occupancy sites such as shopping centers, strips, or malls, the intent shall be to provide enough on-site parking to accommodate the majority of traffic generated by the range of uses which might locate at the site over time. Therefore, the required parking numbers shall correspond to broad use categories as allowed in the respective zoning district, not specific uses. The total minimum number of required parking spaces as determined by the Planning Official shall be documented on the approved zoning and land development site plan for the facility. A change of tenants and/or use of a unit within an existing multiple occupancy site shall not require an alteration in parking requirements. A change in floor area of a unit or units within a multiple occupancy site may require additional parking per item B above.
D. In the case of mixed uses occupying the same building or structure, the total requirement for off-street parking areas shall be the sum of the requirements of the various uses computed separately except as allowed in a shared parking plan.
E. Shared Parking Plan - The applicant shall submit sufficient data to indicate the principal operating hours of the uses. If the data supports that the peak parking demands of the various

uses will not overlap such that sufficient parking can be available during all hours of operation, the Planning Official shall determine the shared parking requirement, if any. The total minimum number of required parking spaces as determined by the Planning Official shall be documented on the approved zoning and land development site plan for the facility.

F. Maximum Parking Standards
   1. Parking lots of twenty-one (21) to fifty (50) spaces may not have more than 150% of the number of spaces required in Table 3-3.
   2. Parking lots of fifty-one (51) spaces or more may not have more than 125% of the number of parking spaces required in Table 3-3.

G. Off-street parking shall not be permitted in any required buffer area.

3:6.1-2 Land To Provide Parking

Required off-street parking must be provided on the same lot or parcel or within 200 feet of the principal use for which it is required, or on a parking facility the title to which and/or easement for the use of which runs with and/or is appurtenant to the title to such principal use, or where such parking is to be provided by a public garage or facility, approved by the Planning Official.

3:6.2 Design Standards

Where off-street parking for more than ten (10) or more vehicles is required, the following design and development standards shall apply:

A. **Parking Dimensions** - Parking stalls shall be not less than nine (9) feet by nineteen (19) feet, except that a maximum twenty (20) percent of the total number of stalls may be eight and one-half (8½) feet by eighteen (18) feet and designated for small cars. However, the dimensions of all parallel parking stalls shall be not less than nine (9) feet by twenty-four (24) feet. Parking for tractor-trailers shall be twelve (12) feet by fifty (50) feet. Minimum isle width shall be as follows:

Table 3-17 OFF-STREET PARKING: MINIMUM AISLE WIDTHS	
90 Degree Parking	25 feet
60 Degree Parking	18 feet
45 Degree Parking	13 feet
Mini Warehouses	27 feet*
*Drive aisles adjacent to all storage unit doors	

B. **Construction, Paving** - Expansive impervious surface parking lots shall be avoided. Instead, parking lots shall be broken down into sections as appropriate for the type and size of the development, and shall be separated by landscaped dividing strips, berms, and similar devices per the Buffering, Screening, Open Space and Landscaping Regulations of this Ordinance. Paving may consist of asphalt, concrete, crushed stone, pavers, gravel, or other material approved by the Planning Official. Pervious pavement is encouraged.

C. **Drainage** - Parking lot construction shall be designed to minimize off-site stormwater runoff. Stormwater runoff shall be utilized to the maximum extent practicable for landscaping irrigation and/or diverted to vegetative swales and bioretention cells.

Parking lots shall be designed so as not to drain into or across public sidewalks or onto adjacent property, except into a natural watercourse or a drainage easement.

In developed areas where this condition may be impossible to meet, the County Engineer may exempt the developer from this requirement, provided that adequate provision is made for drainage, the post runoff rate does not exceed the pre runoff rate, and stormwater quality is not compromised.

D. **Separation from Walkways and Streets** - Off-street parking spaces shall be separated from walkways, sidewalks, streets, or alleys, and required yards and buffer areas by a wall, fence, curbing, or other protective device approved by the Planning Official per the Buffering, Screening, Landscaping, and Open Space Regulations section of this Ordinance.

E. **Entrances and Exits** - Landscaping, curbing, or other approved barriers shall be provided along boundaries to control entrance and exit of vehicles or pedestrians. All off-street parking areas shall be designed so that all movement onto a public street is in a forward motion. Entrance and exit driveways (curb cuts) to public streets and alleys must be at least forty (40) feet from intersections of public streets, measured from the centerline of the intersection to centerline of the driveway.

F. **Marking** - Parking lots shall be marked by painted lines, curbs, or other means to indicate individual spaces. Signs or markers, as approved by the Planning Official, shall be used as necessary to ensure efficient traffic operation of the lot.

G. **Lighting** - Lighting shall be provided if off-street parking spaces are to be used at night. Lighting fixtures shall be shielded so as to prevent misdirected or excessive artificial light that will trespass into adjacent residential properties, interfere with traffic, or contribute to night sky light pollution.

H. **Landscaping** - Off-street parking areas shall be landscaped in accord with the Buffering, Screening, Open Space and Landscaping Regulations section of this Ordinance.

3:6.3 Maintenance

All off-street parking areas shall be maintained in a clean, orderly, dust-free, and weed-free condition at the expense of the owner or lessee, and not used for the sale, repair, or dismantling or servicing of any vehicles or equipment, except for service and auto repair stations.

3:6.4 Parking Spaces for the Physically Handicapped

When off-street parking is required for any building or use, except for residential dwellings with fewer than twenty (20) units, parking for the handicapped shall be included when calculating the overall parking requirements for such building or use, based on the following formula:

Table 3-18 REQUIRED NUMBER OF HANDICAPPED SPACES

Number of Required Spaces	Number of Spaces Reserved for Handicapped Persons
Up to 25	1
26 to 50	2
51 to 75	3
76 to 100	4
101 to 150	5
151 to 200	6
201 to 300	7
301 to 400	8
401 to 500	9
500-1,000	2% of total required
1,001 and over	20, plus one for each 100 or fraction thereof over 1,000

A minimum of one (1) van accessible space shall be provided for each six (6) handicapped spaces or fraction thereof. Handicapped parking spaces shall measure eight (8) feet in width by twenty (20) feet in length. Each accessible parking space must be adjacent to a five (5) foot wide access aisle. Van accessible spaces must be adjacent to an eight (8) foot wide access aisle. Handicapped spaces shall be located as close as possible to ramps, walkways, and entrances. Parking spaces should be located so that physically handicapped persons are not compelled to wheel or walk behind parked cars to reach entrances, ramps, and walkways. Note that the SC Building Code has special accessibility requirements for multi-family, hotel/motel, hospital and physical therapy outpatient, and rehabilitation facilities.

3:6.5 Off-Street Loading

All uses shall provide off-street loading space sufficient for their requirements. Such space shall be arranged so that no vehicle being loaded or unloaded in connection with normal operations shall stand in or project into a public street, walk, alley, or private street.

Off-street loading and unloading space shall in all cases be located on the same lot or parcel of land as the structures they are intended to serve.

3:6.6 Approval of Parking and Off-Street Loading Plans and Layouts

Designs and plans for areas to be used for off-street parking and off-street loading shall be subject to approval by the Planning Official, who may withhold a permit or take other action if

the layout of either would create avoidable safety or traffic congestion problems, or does not meet the standards and requirements of this section. An administrative action of the Planning Official may be appealed to the Board of Zoning Appeals.

3:6.7 Parking, Storage, and Use of Recreational Vehicles (Campers) and Boats

3:6.7-1 In Commercial and Residential Zones

A. In commercial and residential zones, no recreational vehicle shall be parked or stored in any required front or side yard setback area.
B. A recreational vehicle or trailer may be parked anywhere on a premise for a period not to exceed twenty-four (24) hours during loading or unloading.
C. Recreational vehicles may be used for temporary lodging up to fourteen (14) days per calendar year, increasing to thirty (30) days when incidental to on-premise construction pursuant to a valid building permit.
D. No boat in excess of seventeen (17) feet may be parked or stored in a required front or side yard setback area, except on lots or parcels contiguous to a navigable water body.
E. A temporary use permit may be issued by the Planning Official for an appropriate period of time not to exceed twelve (12) month increments for nonconforming buildings, structures, or uses incidental to building construction, land development, or when deemed to be generally beneficial, provided that the owner of such temporary nonconforming use agrees to implement installation requirements deemed appropriate for by the Planning Official and to remove the temporary nonconforming use upon expiration of the permit. In determining installation requirements, the Planning Official shall consider the type of structure, the use of the structure, and duration of use. Installation requirements may include temporary anchoring, potable water supply, waste water disposal, and power supply.

3:6.7-2 In Rural Zones

A. In rural zones, recreational vehicles or travel trailers may be used for temporary lodging for up to thirty (30) days per calendar year, with a thirty (30) day extension when incidental to on-premise construction pursuant to a valid building permit.
B. A temporary use permit may be issued by the Planning Official for an appropriate period of time not to exceed twelve (12) month increments for nonconforming buildings, structures, or uses incidental to building construction, land development, or when deemed to be generally beneficial, provided that the owner of such temporary nonconforming use agrees to implement installation requirements deemed appropriate by the Planning Official and to remove the temporary nonconforming use upon expiration of the permit. In determining installation requirements, the Planning Official shall consider the type of structure, the use of the structure, and duration of use. Installation requirements may include temporary anchoring, potable water supply, waste water disposal, and power supply.

3:6.8 Parking, Storage and Use of Non-Recreational Vehicles and Equipment

3:6.8-1 Inoperable Vehicles and Vehicles without Current License Plates

A. No more than one (1) automobile, truck, or trailer of any kind or type which is not operable or does not display a current license tag shall be parked or stored on any lot. Any additional

automobile, truck, or trailer of any kind or type which is not operable or does not display a current license tag shall not be parked or stored on any lot unless it is completely enclosed in a building or physically removed from vision from neighboring property and the public street serving the property.

B. In addition to the one (1) permitted inoperable or unlicensed vehicle, one (1) inoperable or unlicensed automobile, truck, or trailer of any kind or type that is being advertised as for sale by the owner or resident of the lot may be displayed on the lot for a period not to exceed sixty (60) days. After such time, the vehicle must be completely enclosed in a building or physically removed from vision from neighboring property and the public street serving the property.

3:6.8-2 Vehicles on Blocks, Jacks, or any Suspension Other Than Their Own

A. One (1) automobile, truck, trailer, or vehicle of any kind or type, displaying or not displaying a current license tag, which is in the process of being repaired may remain on blocks, jacks, or any suspension system other than its own for no more than thirty (30) days. After such time, the vehicle must be operable and in compliance with this section or be completely enclosed in a building or physically removed from vision from neighboring property and the public street serving the property.

3:6.8-3 Vehicles Used for Commercial, Industrial, Farm, or Construction Purposes

A. The parking of vehicles with a capacity equal to or less than two (2) tons used for commercial, industrial, farm, or construction purposes in the R-15, R-10, R-6 and O-I districts shall be limited to one vehicle per single residence or business.

B. Vehicles with capacity greater than two (2) tons and used for commercial, industrial, farm, or construction purposes are prohibited from parking in the R-15, R-10, R-6 and O-I districts, including the street/highway right-of-way in such districts when not actively involved in commerce.

3:6.8-4 Implements and/or Equipment Used for Commercial, Industrial, Agricultural, or Construction Purposes

Implements and/or equipment used for commercial, industrial, agricultural, or construction purposes shall not be stored or parked on any lot in the R-15, R-10, R-6, or O-I districts, other than in completely enclosed buildings or physically removed from vision from neighboring property and the public street serving the property.

3:7 SPECIAL PURPOSE DISTRICT REGULATIONS

3:7.1 Airport Overlay District

3:7.1-1 Types of Zones

In order to carry out the provisions of this section, there are hereby created and established certain zones which include all of the land lying within the instrument approach zones, non-instrument approach zones, transition zones, horizontal zones, and conical zones. These zones are hereby established in the adopted Kershaw County-Woodward Field Airport Airspace Plan and defined as follows:

A. **Precision Instrument Approach Zone** - A precision instrument approach zone is established at each end of the precision instrument runway for instrument landings and takeoffs. The precision instrument approach zone shall have a width of 1,000 feet at a distance of 200 feet beyond each end of the runway, widening thereafter uniformly to a width of 16,000 feet at a distance of 50,200 feet beyond each end of the runway, its centerline being the continuation of the centerline of the runway. Its surface begins at the runway end elevation starting 200 feet beyond the end of the runway and slopes upward and outward one (1) foot vertically for each fifty (50) feet horizontally for a distance of 10,200 feet from the runway end, then continues upward and outward one (1) foot vertically for each forty (40) feet horizontally for a distance of 40,000 feet.

B. **Non-Precision Instrument Approach Zone** - A non-precision instrument approach zone is established at each end of all non-precision instrument runways for non-precision instrument landings and takeoffs. The non-precision instrument approach zone shall have a width of 500 feet or 1,000 feet if a precision instrument approach zone occurs at the opposite end of that runway, beginning at a distance of 200 feet beyond each end of the runway, widening thereafter uniformly to a width of 4,000 feet at a distance of 10,200 feet beyond each end of the runway, its centerline being the continuation of the centerline of the runway. Its surface begins at the runway end elevation starting 200 feet beyond the end of the runway and slopes upward and outward one (1) foot vertically for each thirty-four (34) feet horizontally for a distance of 10,200 feet from the runway end.

C. **Visual Approach Zone** - A visual approach zone is established at the end of all runways that do not have precision-instrument or non-precision instrument landings and takeoffs. The visual approach zone shall have a width of 500 feet or 1,000 feet if a precision instrument approach zone occurs at the opposite end of that runway, beginning at a distance of 200 feet beyond each end of the runway, widening thereafter uniformly to a width of 1,500 feet at a distance of 5,200 feet beyond each end of the runway, its centerline being the continuation of the centerline of the runway. Its surface begins at the runway end elevation starting 200 feet beyond the end of the runway and slopes upward and outward one (1) foot vertically for each twenty (20) feet horizontally for a distance of 5,200 feet from the runway end.

D. **Transition Zones** - Transition zones are hereby established adjacent to each precision-instrument, non-precision instrument, and visual runway approach zone. Transition zones symmetrically located on either side of runways have variable widths, extending outward from a line 250 feet on either side of the centerline of the visual and non-precision instrument runway, for the length of such runway plus 200 feet on each end; and 500 feet on either side of the centerline of the precision-instrument runway, for the length of such runway plus 200 feet on each end, and are parallel and level with such runway centerlines. The transitional zone's surface along such runways slope upward and outward one (1) foot vertically for each seven (7) feet horizontally to the point where they intersect the surface of the horizontal zone. Further, transitional zones are established adjacent to precision instrument, non-precision instrument, and visual approach zones for the entire length of the approach zones. The transitional zones flare symmetrically with either side of the runway approach zones from the base of such zones and slope upward and outward at the rate of one (1) foot vertically for each seven (7) feet horizontally to the points where they intersect the surfaces of the horizontal and conical zones. Additionally, transition zones are established adjacent to the precision instrument approach zone where it projects through and beyond the limits of the conical zone extending a distance of 5,000 feet measured horizontally from the edge of the

precision instrument approach zones at right angles to the continuation of the centerline of the runway.

E. **Horizontal Zone** - A horizontal zone is hereby established as the area within a radius of 10,000 feet whose starting point is aligned along the extended runway centerline (to 200 feet beyond each runway end). The surface of the horizontal zone is a plane 150 feet above the established runway elevation. The horizontal zone does not include the precision instrument, non-precision instrument, visual approach, or the transition zones.

F. **Conical Zone** - A conical zone is hereby established as the area that commences at the periphery of the horizontal zone and has a surface that extends upward and outward at a rate of one (1) foot vertically for every twenty (20) feet horizontally for a distance of 4,000 feet.

3:7.1-2 Height Limitations

Except as otherwise provided in this Ordinance, no structure shall be erected, altered, or maintained, and no vegetation shall be allowed to grow to a height so as to penetrate any referenced surface of any airport overlay district created by this Ordinance. The height restrictions for the individual zones (districts) shall be those planes delineated as surfaces in Part 77.25 of the Title 14 Code of Federal Regulations, or in successor Federal regulations and as displayed in the Kershaw County-Woodward Field Airport adopted Airport Airspace Plan.

3:7.1-3 Use Regulations

Notwithstanding any other provisions of this Article, no use may be made of land within any zone established by said article in such a manner as to create electrical interference with radio communication between the airport and aircraft, make it difficult for flyers to distinguish between airport lights and others, result in glare in the eyes of flyers using the airport, impair visibility in the vicinity of the airport, or otherwise endanger the landing, taking off, or maneuvering of aircraft.

3:7.1-4 Nonconforming Uses

Marking and Lighting - The owner of any nonconforming structure or tree is hereby required to permit the installation, operation, and maintenance thereon of such markers and lights as shall be deemed necessary to indicate to the operators of aircraft in the vicinity of the airport, the presence of such airport hazards.

3:7.2 Historic Overlay District (HOD)

3:7.2-1 Type of District; Permitted Uses

The historic overlay district (HOD) is an “overlay” district. As such, permitted uses are determined by the underlying or primary zoning district. Where this district overlays a residential zoning district, for example, only those uses permitted in the residential zoning district shall be permitted in the HOD, subject to the additional requirements and standards of this section.

3:7.2-2 Intent of Historic Overlay District

The historic overlay district is intended to promote the educational, cultural, economic, and general welfare of the public by providing a mechanism for the identification, recognition, preservation, maintenance, protection, and enhancement of existing historic and architecturally

valuable structures, properties, and neighborhoods which serve as a visible reminder of the social, cultural, economic, political, and/or architectural history of Kershaw County.

Through historic preservation and the encouragement of harmonious outward appearance, the historic overlay district and its related review procedures will help ensure the following:

A. Protection and preservation of the heritage of Kershaw County so that its historically and architecturally valuable sites, structures, properties, and neighborhoods continue to be a distinctive aspect of the County and a visible reminder of the special historical and cultural heritage of the County;
B. preservation of the integrity and stability of neighborhoods and business areas;
C. conservation and enhancement of property values of historic and architecturally valuable sites, structures, properties, and, neighborhoods; and
D. promotion of the continued attraction of businesses, residents, and tourists thereby strengthening the local economy.

3:7.2-3 Establishment of a Historic Overlay District

A historic overlay district shall be established on the Official Zoning Map by the same procedure as amendments generally.

The Planning and Zoning Commission shall review all plans in accord with this Ordinance.

3:7.2-4 Certificate of Appropriateness Required

Where within a historic overlay district, established and shown on the Official Zoning Map, the exterior appearance of any building or structure is involved, the Building Official shall issue no permit for erection, alteration, improvement, demolition, or moving of such structure unless and until a certificate of appropriateness has been issued.

Any action by an applicant following issuance of a permit requiring a certificate of appropriateness shall be in accord with the approved certificate.

3:7.2-5 Powers and Duties of the Planning and Zoning Commission

The Planning and Zoning Commission shall receive, review, and issue applications for a certificates of appropriateness. The Planning and Zoning Commission shall deny the issuance of a certificate of appropriateness if it finds that the action proposed would adversely affect the character and environment of the effected area. Where certification is denied, the Commission shall record its reasons for denial.

3:7.2-6 General Review Standards for Appropriateness

In considering the issue of appropriateness, the Planning and Zoning Commission shall be guided by the following guidelines:

A. A property shall be used as it was historically used or an adaptive re-use that requires minimal change in its distinctive materials, features, spaces, and spatial relationships may be permitted.
B. The historic character of a property shall be retained and preserved. The removal of distinctive materials or alteration of features, spaces, and spatial relationships that characterize a property shall be avoided.

C. Each property shall be recognized as a physical record of its time, place, and use. Changes that create a false sense of historical development such as adding conjectural features or elements from other historic properties shall not be undertaken.
D. Changes to a property that have acquired historic significance in their own right shall be retained and preserved.
E. Distinctive materials, features, finishes, and construction techniques or examples of craftsmanship that characterize a property shall be preserved.
F. Deteriorated historic features shall be repaired rather than replaced. Where the severity of deterioration requires replacement of a distinctive feature, the new feature shall match the old in design, color, texture, and where possible, materials. Replacement of missing features shall be substantiated by documentary and physical evidence.
G. Chemical or physical treatments, if appropriate, shall be undertaken using the gentlest means possible. Treatments that cause damage to historic materials shall not be used.
H. Archeological resources shall be protected and preserved in place. If such resources must be disturbed, mitigation measures shall be undertaken.
I. New additions, exterior alterations, or related new construction shall not destroy historic materials, features, and spatial relationships that characterize the property. The new work shall be differentiated from the old and shall be compatible with the historic materials, features, size, scale, proportion, and massing to protect the integrity of the property and its environment.
J. New additions and adjacent or related new construction shall be undertaken in such a manner that, if removed in the future, the essential form and integrity of the historic property and its environment shall be unimpaired.

3:7.2-7 General Design Standards and Appropriateness

At a minimum, the Planning and Zoning Commission shall consider the following general design standards when considering an application for appropriateness:

A. **Height** - The height of any proposed alteration or construction should be compatible with the style and character of the landmark and with surrounding structures.
B. **Proportions of Windows and Doors** - The proportions and relationships between doors and windows should be compatible with the architectural styles and character of the landmark and with surrounding structures.
C. **Relationships** - The relationship of a structure to the open space between it and adjoining structures should be compatible.
D. **Roof Shape** - The design of the roof should be compatible with the architectural style and character of the landmark and surrounding structures.
E. **Landscaping** - Landscaping should be compatible with the architectural character and appearances of the landmark and of surrounding structures and landscapes. Landscaping to meet the requirements of the buffering, screening, open space, and landscaping regulations of this Ordinance that would result in incompatibility with these requirements shall be waived.
F. **Scale** - The scale of the structure after alteration, construction, or partial demolition should be compatible with its architectural style and character and with surrounding structures.
G. **Directional Expression** - Facades should blend with other structures with regard to directional expression. Structures should be compatible with the dominant horizontal or vertical expression of surrounding structures. The directional expression of a landmark after

alteration, construction, or partial demolition should be compatible with its original architectural style and character.

H. **Architectural Details** - Architectural details including materials, colors, and textures should be treated so as to make a landmark compatible with its original architectural style and character and to preserve and enhance the architectural style or character of a landmark or historic district.

3:7.2-8 Certain Work Exempt from Commission Review

Nothing in this section shall be construed to prevent the ordinary maintenance or repair of any building or any structure which does not require a building permit, nor to prevent the demolition of any structure or building characterized by neglect in maintenance of such building or structure to the extent that it creates hazardous or unsafe conditions.

Such a determination by the Planning Official shall be forwarded to the Planning and Zoning Commission for review and comment before a permit to demolish such building or structure is issued.

The Planning and Zoning Commission shall have the right to override the decision of the Planning Official to demolish, subject to appeal to Circuit Court as provided in the Administration article of this Ordinance

3:7.2-9 Development and Dimensional Standards

Exceptions to development standards may be granted by the Planning and Zoning Commission, and variances to dimensional and primary zoning districts standards may be granted by the Board of Zoning Appeals per the provisions of the Administration article of this Ordinance.

3:7.2-10 Unreasonable Hardship

If a proposal is denied or a property owner realizes that he cannot comply with the requirements of this section, the applicant may apply to the Planning and Zoning Commission for an exemption based on the unreasonable hardship of maintaining the property according to the historic overlay district design guidelines. The property owner shall supply information to demonstrate unreasonable hardship.

3:7.2-11 Applications and Materials to be Submitted to the Commission

Applications for certificates of appropriateness shall be submitted through the office of the Planning Official to the Planning and Zoning Commission for review and action. The Commission shall act on such application within forty-five (45) days of receipt thereof.

By general rule or by specific request in a particular case, the Planning and Zoning Commission may require submission of any or all of the following information in connection with the application:

A. Architectural plans.
B. Site plans.
C. Landscaping plans.
D. Proposed signs and appropriate detail as to character.
E. Proposed exterior lighting arrangements.
F. Elevations of all portions of structures with important relationships to public view and indications as to construction materials.

G. Design of doors and windows.
H. Ornamentation.
I. Colors and the like.
J. Photographs or perspective drawings indicating visual relationships to adjoining structures and spaces.
K. Such other exhibits and reports as are necessary for its determination.

3:7.2-12 General Certification of Appropriateness

A general certification for appropriateness for specific kinds of alterations may be issued by the Planning Official if he finds that a particular material, paint color, design, architectural feature, or style is generally acceptable and appropriate within the district. If the Planning Official finds, upon examination of the application, that all aspects which would require Planning and Zoning Commission approval are met through the general certificate of appropriateness process, he may proceed without referral to the Planning and Zoning Commission. However, the authority to issue a general certification of appropriateness regarding particular materials, paint color, etc., shall first be recommended by the Planning and Zoning Commission and approved by the County Council. Only then may a general certification of appropriateness become established covering a particular material, paint color, design architectural feature, etc., which the Planning Official may unilaterally decide upon.

3:7.3 Planned Development Districts (PDDs)

This zoning district designates an area for which an approved development plan constitutes the district regulations. It is intended to utilize the factors of efficiency, economy, flexibility, creative site design, improved appearance, compatibility of mixed uses, maximum benefits from open space and green space, safe and efficient vehicular and pedestrian access for a development characterized by a unified site design for mixed uses. A planned development district may be predominately residential, commercial, industrial, or any combination thereof.

3:7.3-1 Permitted Uses in Planned Development Districts

Planned development districts (PDDs) may permit a mixture of different types of housing with compatible commercial uses, shopping centers, office parks, and other mixed used developments. Flexibility in design, character, and quality of development and preservation of natural and scenic features are made possible through the approval of a plan which describes the specific uses, densities, setbacks, and other requirements for a planned development. The approval plan constitutes the district regulations for a particular planned development. Any use or combination of uses meeting the objectives of this section may be established in a PDD through an ordinance amendment as provided for in this Ordinance. Once approved, the proposed use(s) and no others shall be permitted. Said uses shall be identified and listed on the basis of classification, i.e. retail, office, wholesale, residential multi-family, residential single-family detached, manufacturing, etc. The list of approved uses shall be binding on the applicant and any successor in title, so long as the PDD zoning applies to the land, unless otherwise amended by ordinance. The applicant may specify that standard zoning district regulations shall apply to specific use areas within the project. For example, in an area designated for retail commercial, the applicant may specify that all B-2 zoning district regulations shall apply.

3:7.3-2 Establishment of Planned Development Districts

PDDs shall be established on the Official Zoning Map by the same procedure as for amendments generally, and in accord with the requirements of this section.

3:7.3-3 Minimum Area Required

Minimum area requirements for establishing a PDD shall be two acres.

3:7.3-4 Development Standards

The applicant may propose alternate regulations, specific for the proposed PDD, in regards to signage, parking, buffers, screening, open spaces, and landscaping, etc. which, if approved, shall become the regulations for the PDD. If no alternate regulations are proposed, the standard zoning regulations per this Ordinance shall apply.

A. **Density and Height Requirements** - Residential density, setbacks, impervious surface ratios, floor area ratios, and building heights shall be determined by the scale of the project in relation to its surroundings and its impact on existing and proposed support facilities such as transportation, water and sewer systems, recreation facilities, etc.

B. **Overall Site Design** - Overall site design shall be harmonious in terms of landscaping, enclosure of principal and accessory uses, size of structures, street patterns, and use relationships.

C. **Parking and Loading** - Unless alternate standards are specified in an approved development plan, off-street parking and loading spaces for the various uses proposed for the PDD shall comply with the standards for off-street parking and interior landscaping of this Ordinance.

D. **Buffer Areas** - Buffer areas shall be required for peripheral uses only, and shall be provided in accord with the requirements for adjacent uses prescribed in this Ordinance unless alternate standards are specified in an approved development plan. There are no specific buffer area requirements for internal use, but buffers are encouraged to mitigate impacts of intensity of uses and/or to serve as transitions between uses.

E. **Streets and Street Improvements** - Private streets may be permitted in a PDD provided such streets meet the design and construction standards promulgated for public streets in accord with the applicable development regulations, further provided that an acceptable maintenance plan be submitted to and approved by the Planning and Zoning Commission.

   The Planning and Zoning Commission may consider alternate private street design standards in consideration of factors such as the following:

   1. Limited use.
   2. Site topographic or geophysical conditions.
   3. Stormwater management.
   4. The preservation of any natural features on the site.
   5. The avoidance of areas of environmental sensitivity.
   6. The minimizing of negative impacts and alteration of natural features.
   7. The avoidance of adversely affecting ground water and aquifer recharge.
   8. The reduction of cut and fill.
   9. The avoidance of unnecessary impervious cover.
   10. The prevention of flooding.
   11. The taking into account of other site-specific design considerations.

F. **Landscaping and Common Open Space** - Landscaping and open space requirements for each PDD shall comply with the provisions of this Ordinance unless alternate standards are specified in an approved development plan.
G. **Signage** - Signage shall be in harmony, in scale with, and reflective of the proposed development. Unless alternate standards are specified in an approved development plan, signage shall comply with the standard signage regulations of this Ordinance.

3:7.3-5 Site Plan Requirements - A site plan showing the proposed development of the area (zone) shall be a prerequisite to approval of a PDD re-zoning. The site plan shall serve as the sketch plan for purposes of the land development submittal requirements of this Ordinance. The site plan shall adhere to the minimum area and development standards requirements of this section and shall address or show the following:

A. The proposed title of the project, project designer, and the developer.
B. The boundaries of the property involved; the general location of all existing easements, property lines, existing streets, and buildings; and other existing physical features on the project site.
C. The approximate location of existing and proposed sanitary and storm sewers, water mains, street lighting, and other service facilities in or near the project.
D. The general location and dimensions of proposed streets.
E. The conceptual land use plan.
    1. Area by land use (i.e. retail, single-family detached residential, multi-family, townhouses, office, park, green space etc.).
    2. Specific allowable uses for each area.
    3. A tabulation of the number of acres in each use area.
    4. Maximum densities expressed in dwelling units per gross acre for residential uses, and floor/area ratio for non residential uses.
    5. Building setbacks.
    6. Maximum impervious surface ratio.
    7. Maximum building heights.
F. The position of the proposed development in relation to its surroundings. Current land use and zoning of the subject site and adjacent property and a site location (vicinity) map shall be provided.
G. Alternate design standard plans to include, as applicable:
    1. Parking and loading.
    2. Buffers, landscaping and common open space.
    3. Street design.
    4. Signage plan.
H. Date.

The Planning and Zoning Commission may establish additional requirements for site plan approval, and in special cases, may waive a particular requirement if, in the opinion of the Commission, the inclusion of that requirement is not essential to a proper assessment of the project.

3:7.3-6 Action by Planning and Zoning Commission and County Council

The Planning and Zoning Commission may recommend to the County Council to approve the plan and application to establish a PDD, including specific modifications to the plan, or to deny

the application to re-zone to establish a PDD. The County Council shall approve the plan and application to establish a PDD, include specific modifications to the plan as conditions for approval, or deny the application to re-zone to establish a PDD.

3:7.3-7 Development of Approved Planned Development Districts

If the request for a PDD re-zoning is approved through an ordinance amendment of the Official Zoning Map by County Council, traffic management plan, preliminary plan, and final plat approval process per the provisions of this Ordinance may proceed. Improvement guarantees may be granted for substantially completed projects per the improvement guarantee provisions of this Ordinance.

After the final plat for the PDD has been recorded, building and sign permits shall be issued in accord with the approved plan as a whole or in stages or portions thereof, as approved. Said permits shall be issued in the same manner as for building and sign permits generally.

3:7.3-8 Changes in Approved Planned Development District Plans

Except as provided below, approved PDD plans shall be binding on the owner and any successor in title.

A. **Minor changes** in an approved PDD site plan may be accommodated and approved by the Planning Official upon a finding that such changes are:
   1. In accord with all applicable regulations in effect at the time of the creation of the PDD district; or
   2. in accord with all applicable regulations currently in effect.
B. **Major changes** to an approved PDD shall constitute an amendment to this Ordinance and must be made through the procedures provided for in this Ordinance for text and map amendments.

   The following constitutes major changes:
   1. Any increase of twenty (20) percent or greater in intensity or use. An increase in intensity of use shall be considered to be an increase in usable floor area; an increase in the number of dwelling or lodging units; or an increase in the amount of outside land area devoted to sales, displays, or demonstrations.
   2. Any reduction in the amount of open space or buffer area resulting in a decrease of more than ten (10) percent or any substantial change in the location or characteristics of open space.
   3. Any change in use from one use group to another.
   4. Substantial changes in pedestrian or vehicular access or circulation.

3:7.3-9 Expiration of Time Limits on Planned Development District Amendments

If a time limit is set as part of the establishing agreement and action is not taken within the time limit set, the Planning and Zoning Commission shall review the circumstances and recommend to the County Council:

A. That PDD status or zoning for the entire area be continued with revised time limits; or
B. that PDD status or zoning be continued for part of the area, with or without revised time limits, and the remainder be re-zoned to an appropriate category.

3:7.3-10 Vested Right

A vested right is the right to undertake and complete the development of a PDD under the terms and conditions provided in this section. A vested right is established for two years upon the approval of a PDD plan, including a phased development plan as provided herein.

A vested right may be extended at the end of the vesting period for an additional twelve (12) months, or thirty-six (36) months for a phased development plan, upon request by the applicant and a determination by the County Council that there is just cause for extension and that the public interest is not adversely affected.

A validly issued building permit does not expire or is not revoked upon expiration of a vested right, except for public safety reasons or as prescribed by the building regulations of this Ordinance.

3:7.3-11 Revocation

A vested right is subject to revocation by the County Council upon determination, after notice and public hearing, that there was a material misrepresentation by the landowner or substantial noncompliance with the terms and conditions of the original or amended approval.

3:7.3-12 Applicability of Other Regulations

A vested right is subject to later enacted Federal, State, or local laws adopted to protect public health, safety, and welfare including, but not limited to building, fire, plumbing, electrical, and mechanical codes; street design, stormwater management, buffers, and other development standards; and nonconforming structure and use regulations which do not provide for the grandfathering of the vested right. The issuance of a building permit vests the specific construction project authorized by the building permit to the building, fire, plumbing, electrical, and mechanical codes in force at the time of the issuance of the building permit.

A vested right is subject to subsequent Kershaw County overlay zoning that imposes site plan-related requirements such as height, density, or intensity, but does not affect allowable types of uses.

A change in the zoning district designation or land use regulations made subsequent to vesting that affect real property does not operate to affect, prevent, or delay development of the real property under a vested site specific development plan or vested phased development plan without consent of the landowner.

The County Council must not require a landowner to waive his vested right as a condition of approval of a site-specific development plan or a phased development plan.

3:7.3-13 Vested Right to Run with Property

A vested right pursuant to this section is not a personal right, but attaches to and runs with the applicable real property. The landowner and all successors to the landowner who secure a vested right pursuant to this section may rely upon and exercise the vested right for its duration subject to applicable Federal, State, and local laws adopted to protect public health, safety, and welfare including, but not limited to building, fire, plumbing, electrical, and mechanical codes; street design, stormwater management, buffers, and other development standards; and nonconforming structure and use regulations which do not provide for the grandfathering of the vested right. This section does not preclude judicial determination that a vested right exists pursuant to other statutory provisions. This section does not affect the provisions of a development agreement

executed pursuant to the South Carolina *Local Government Development Agreement Act* in Chapter 31 of Title 6 and per Article 5 of this Ordinance.

3:7.4 LAKE WATEREE OVERLAY DISTRICT

3:7.4-1 Authority

The Land Use Element of the Comprehensive Plan for Kershaw County, South Carolina 2006 – 2016 has special recommendations for land use on and around Lake Wateree. This section of the Comprehensive Plan is entitled the *Lake Wateree Land Use District*, and states: "Lake Wateree represents a wide diversity of land uses that have the potential to work at cross-purposes: residential, commercial, recreational, and conservation. The goal of Lake Wateree land use policies is to allow for a high quality of life for residential uses, provide for commercial establishments serving the residential and tourist/recreational communities while preserving water quality and protecting the ecology of the Lake and its watershed." The Lake Wateree Overlay District (LWOD) regulations are written pursuant to the Comprehensive Plan's Lake Wateree land use policies.

3:7.4-2 Establishment of the Lake Wateree Overlay District

The boundary of the Lake Wateree Overlay District (LWOD) shall be a one quarter mile (1,320 feet) wide zone starting at, and perpendicular to the project boundary as defined under the Federal Energy Regulatory Commission (FERC) regulatory provisions governing Duke Energy in its management and ownership of the impoundment. The project boundary is contour elevation 225.5 feet above mean sea level (MSL) around Lake Wateree plus metes and bounds surveys at Duke-Energy-owned recreation areas and the dam and powerhouse structures. Any parcel transected by the one quarter mile delineation shall be considered to completely lie within the LWOD.

3:7.4-3 Compliance with Duke Energy Shoreline Management Plan

All shoreline activities on Lake Wateree are subject to Duke Energy Shoreline Management Plan regulations within the project boundary.

3:7.4-4 Group Development Guidelines for the Lake Wateree Overlay District

A group development is a development of a single tract of land or adjacent tracts of land under the same ownership or control. Group developments include commercial, retail, industrial, institutional, multi-family residential, and manufactured home parks, and are classified as major or minor group developments. The Planning and Zoning Commission shall approve all minor and major group development applications within the LWOD in consideration of the principles listed below. The following principles shall also be considered by the Planning and Zoning Commission and the County Council when approving re-zoning requests that would allow for group development uses within the LWOD:

A. **Limit Non-Residential Development**
   1. Allow no industrial uses.
   2. Limit commercial development to establishments serving the residential, tourist, and recreational communities.
   3. Cluster proposed commercial development around existing commercial development.
   4. Safeguard against commercial intrusion into residential areas.

B. **Protect Water Quality**

1. Establish protective shoreline buffers (refer to Lake Wateree Shoreline Buffer Regulations in this section).
2. Implement innovative and efficient individual waste water treatment technologies and maintenance of waste treatment systems (refer to Lake Wateree On-site Sewage Disposal Systems Regulations in this section).
3. Control stormwater runoff by minimizing impervious surfaces and employing other low impact development techniques and practices.

3:7.4-5 Resource Conservation

The Comprehensive Plan recommends riparian buffers for tributaries of Lake Wateree and the enforcement of forestry best management practices for logging activities in the vicinity of the Lake. These provisions have been enacted county-wide and are included in the Water Quality Buffers and the Forestry Activity regulations in Article 5 of this Ordinance. County-wide provisions for shoreline buffers are included in the Water Quality Buffer section in Article 5. Special provisions for the shoreline buffer on Lake Wateree are presented below.

3:7.4-6 Lake Wateree Shoreline Buffer Regulations

A. **Applicability** - These regulations apply to all parcels of land contiguous to the project boundary of Lake Wateree. The project boundary on Lake Wateree shall be as defined under the FERC regulatory provisions governing Duke Energy in its management and ownership of the impoundment (hereafter the "project boundary"). The project boundary is contour elevation 225.5 feet above mean sea level (MSL) around Lake Wateree plus metes and bounds surveys at Duke-Energy-owned recreation areas and the dam and powerhouse structures. All activities within the project boundary are subject to Duke Energy Shoreline Management regulations.

B. **Undeveloped Parcels** - The following shoreline buffer requirements apply to all undeveloped parcels of land contiguous to the project boundary in existence as of the effective date of this Ordinance. Any subsequent development and/or subdivision of such parcels shall comply with the shoreline buffer requirements of this section.

   1. **General Requirements** - Any existing undeveloped parcel or subsequent subdivisions thereof that have any portion of its boundaries adjacent to Lake Wateree shall have a fifty (50) foot buffer perpendicular to the project boundary. The distance of the interior edge of the buffer shall be measured horizontally, such that at any point along the interior edge, a horizontal line would be exactly fifty (50) feet from a vertical line extending up from the project boundary.
   2. **Disturbance of Buffers** - Installation of any new structures (including structure replacements), disturbance of the existing terrain, or removal of existing vegetation within the water quality buffer is prohibited except as provided herein. The installation of septic systems or any portion thereof is prohibited within shoreline buffers. This prohibition includes any disturbance or removal of topsoil, trees, and other natural growth located in the buffers, for any purpose, subject to the express, limited exceptions listed below.

a. **General Exceptions** - The following exceptions are permitted within the buffers established herein without a permit, but only upon strict observance and compliance with the provisions stated below:

1.) **Tree Removal**

a.) Within the buffer, trees less than four (4) inches DBH may be removed, provided it is done using only manual labor and hand or chain saws, and not mechanical equipment.

b.) Additionally, any trees that are dead or have become diseased or damaged through natural processes may be removed in the same manner.

c.) No motorized vehicles or construction equipment other than chain saws or similar hand-operated machines are permitted within the buffer, except as specifically provided in these regulations.

2.) **Underbrush Removal**

a.) Underbrush (defined as nuisance bushes, vines, and similar rank plant growth beneath the tree canopy) may be removed within the buffer, provided that such work is performed manually and without the use of vehicular or mechanical equipment or chemical applications.

b.) This activity may also include removal of any natural or man-made debris lying on or near the floor of the buffer.

3.) **Pruning and Trimming**

a.) Pruning and trimming of trees within the buffer is permitted, provided that pruning shall be limited to tree branches beginning at the ground and extending up the tree trunk no more than one half of the total height of the tree.

b.) Trimming or pruning may also be performed on any limbs or branches that are diseased or naturally damaged.

c.) No topping of trees is permitted within the buffer.

4.) **Emergency Operations -** Activities associated with emergency operations, such as hazardous materials removal, flood or fire control, evacuations, and storm damage clean up are exempt from these requirements. However, any such activity must be authorized by an appropriate government agency or conducted in accordance with prior emergency management regulations.

5.) **Eminent Domain** - Activities conducted or required by the US Government, the State of South Carolina, Kershaw County, railroads, public utilities, or other entities that typically have the power of eminent domain (e.g., utility or roadway right-of-way, construction, and maintenance) are not subject to the provisions of this section. However, such activities, where practicable, should be conducted in a manner that is consistent with the requirements of the Lake Wateree shoreline buffer regulations.

b. **Exceptions Requiring a Permit** - The following exceptions are permitted within required water quality buffers only after submission of an application for and issuance of a written permit or approval by the Planning Official:

1.) **View Corridors**

a.) Tree removal within shoreline buffers to allow for view corridors is allowed; provided that such removal shall not exceed fifteen (15) feet in width, and

shall not constitute an area greater than one-fifth of the total buffer area required on each lot; or

b.) alternatively, trees may be removed randomly for the purpose of improving the lake view, provided that an amount not greater than one-tenth of the total DBH of all trees located in the buffer area of each lot is removed.

c.) Any tree removal shall be manually performed using hand or chain saws, and no other disturbance of the natural terrain is permitted.

d.) Any view corridors or open area created through the utilization of this provision shall be stabilized and improved with shrubs, low-growing trees, or other natural groundcover plantings.

2.) **Access Corridors**

a.) **Tree Removal** - Tree removal within buffers is allowed in order to:

i. Provide a limited access corridor to the lakeshore;

ii. install shoreline stabilization and water-dependent structures;

iii. remove large debris or previously existing nonconforming structures; and

iv. install paths, boardwalks, or stairs to access water-dependent structures.

b.) **Standards**

i. This access corridor shall not exceed fifteen (15) feet in width and shall not constitute an area greater than one-fifth of the total buffer area required for each lot.

ii. Vehicular equipment may be operated in an approved access corridor; provided that, to the furthest extent practicable, the equipment utilizes rubberized mini-track systems and the natural terrain is disturbed only to the extent required to safely operate such equipment.

iii. After such disturbance, the resulting terrain shall be stabilized and revegetated with shrubs, low-growing trees, and other natural groundcover plantings that closely match the existing terrain on either side of the access corridor.

iv. When the access corridor provided in this section is used for the installation of paths, boardwalks, or stairs leading to the Lake, such structures shall not exceed six (6) feet in width.

3.) **Separation Between Corridors** - Applications for multiple view and access corridors will be considered under the following conditions:

a.) There shall be a minimum of 100 linear feet of buffer between corridors.

b.) The combined area of all corridors cannot exceed twenty-five (25) percent of the total buffer area of each lot.

4.) **Shoreline Bank Stabilization** - Proposed shoreline bank stabilization plans must be submitted to Duke Energy for their authorization under the Duke Energy Shoreline Management Guidelines Shoreline Stabilization Program.

5.) **Nonconforming Structures** - Any structure located within the buffer or under construction on a lot existing as of the effective date of this Ordinance, including dwellings, barns, outbuildings, garages, carports, guesthouses, patios, decks, outdoor recreation structures, or water-dependent structures such as docks, boathouses, or piers, shall be allowed to remain as a nonconforming structure. The property owner must be able to document its prior existence through property tax records, building permits, contracts for construction, or other clear evidence.

a.) Work within the existing footprint of a nonconforming structure may be undertaken for purposes of maintenance, repair, and renovation of the nonconforming structure lying within the shoreline buffers.

b.) In any such case, however, the nonconformity may not be expanded or the use of the nonconforming structure altered.

6.) **Water-Dependent Structures -** Proposed water-dependent structures such as docks, boathouses, or piers must be submitted to Duke Energy for their authorization under the Duke Energy Shoreline Management Guidelines Private Facilities Program.

7.) **Exceptions for Public Recreational Facilities**

a.) **Purpose** - Lake Wateree is a valuable recreational resource for the citizens of Kershaw County and its guest tourists. The value of the Lake as a recreational resource is dependent upon the protection of its water quality. Because public recreational facilities such as swimming beaches, boat ramps, trails, picnic areas, bank fishing areas, and fishing docks require direct shoreline access and/or viewsheds, the following exceptions to the disturbance of buffers at such facilities are provided.

b.) **Modification of Buffer Boundaries** - Activity areas of public recreational facilities that are strictly water and shoreline dependant (swimming beaches, boat launches, and bank fishing areas) may have the exterior (lakeside) boundary of the fifty (50) foot buffer adjusted to follow the proposed perimeter of the activity area. In such cases, the distance of the interior edge of the buffer shall be measured horizontally, such that at any point along the interior edge, a horizontal line would be exactly fifty (50) feet from a vertical line extending up from the perimeter of the activity area.

c.) **Location of Facilities** - Public recreational facilities that are not water dependant (parking lots, bath houses, club houses, picnic shelters, etc.) shall be located behind the interior buffer boundaries.

d.) **Access and View Corridors at Public Recreational Facilities**

i. **Access Corridors -** Corridors through the buffer shall be permitted to allow pedestrian access to water dependant shoreline activity areas. The number of access corridors shall be limited to those needed to provide adequate access between the activity areas and recreational facilities. Access corridors shall also be permitted to provide vehicular access to boat launches.

ii. **View Corridors -** Lake views are an important factor in the recreational experience for non-water dependant activities such as picnicking and walking. Recreational facilities master plans shall consider the placement of facilities desiring viewsheds and the design of the viewshed to accommodate the lake view without diminishing the water quality functionality of the buffer.

e.) **Stormwater Management** - The public recreational facility master plan shall incorporate the following stormwater best management practices and stormwater pollution prevention measures:

i. Access corridors shall be designed such that there is positive drainage of the corridors into the buffer area and such that the corridors do not function

as a conduit for direct stormwater discharge into the Lake. Corridor drainage shall be designed to promote sheet flow to minimize channelization of runoff.

ii. Land development shall be planned in harmony with the natural run-off pattern and along the contours.

iii. Impervious surfaces shall be limited. Surface drainage shall be designed to promote sheet flow to minimize channelization of runoff.

iv. Chemicals such as fertilizers and pesticides shall be applied at appropriate rates and shall not be applied within 100 feet of unprotected shorelines.

v. All trash receptacles shall be firmly secured from animal and weather disturbances and contact with stormwater.

f.) **Review and Approval of Public Recreational Facility Master Plans -** The recreational facility master plans shall be included in the group development submittal and review and shall be approved by the Planning and Zoning Commission per the submittal requirements and approval process provisions of this Ordinance.

c. **Approval Procedures for Permitted Activity**

1.) Except as permitted under the General Exceptions provisions, no shoreline stabilization, tree removal, or land disturbance activity of any kind, including those permitted under the Exceptions Requiring a Permit provisions, shall be conducted in the buffer without a written permit for such activity issued by the Kershaw County Planning and Zoning Department. In order to apply for approval, the lot owner must supply the Planning and Zoning Department with three (3) copies of a survey prepared by a South Carolina-registered land surveyor, showing the following:

a.) The extent of the shoreline buffer on the subject property shown by metes and bounds.

b.) The labeling of the shoreline buffer.

c.) The location of any previously existing nonconforming structures located within the buffer.

d.) The location and size of any existing tree, four (4) inches DBH or greater, located in the buffer.

e.) The location of the proposed activities for which approval is being requested.

2.) The approval request shall be submitted in writing and shall include a detailed description of the permitted activity with any required supporting information needed to establish that the requested activity meets the requirements of this section. Requests with incomplete information to support the proposed activity will not be considered. Survey flagging shall clearly indicate the following:

a.) The location of the project boundary.

b.) The interior edge of the buffers.

c.) All trees four (4) inches DBH or greater.

d.) All trees proposed to be removed.

e.) All areas proposed to be disturbed on the subject property.

d. **Restoration of Previously Disturbed Buffers**

1.) **Applicability -** These provisions apply to undeveloped parcels in which the shoreline buffer has been disturbed prior to the effective date of this Ordinance

through logging or other activity. The fifty (50) foot buffer shall be restored prior to obtaining a land development and/or building permit.

2.) **Restoration Plan -** In areas in which the natural shoreline buffer has been disturbed or compromised, the buffer shall be enhanced with additional plantings within the fifty (50) foot buffer zone perpendicular to project boundary. When landscaping within the buffer is conducted as a means of restoring the natural buffer, it shall be performed manually and without the use of vehicular or mechanical equipment to the greatest extent practicable, and stringent sediment and erosion controls shall be utilized to protect the Lake from siltation as a result of landscaping activities. Planting of native and adaptive species is encouraged. The planting of invasive species is not allowed. A list native and adaptive species is available from the Planning and Zoning Department. The applicant shall submit a shoreline buffer restoration plan to the Planning and Zoning Office which must be approved prior to the issuance of a land development and/or building permit. Final project certification of approval shall not be issued until the approved shoreline buffer restoration plan has been implemented and inspected. The plan shall include:

a.) Existing conditions of the shoreline buffer zone to include the location and species of all trees over four (4) inches DBH, and existing non-conforming structures.

b.) Landscape plan and planting schedule showing location and species of new plantings within the buffer zone.

c.) Vegetation Density of the Restored Shoreline Buffer - Utilize existing vegetation and augment with new plantings to achieve the following minimum densities:

d.) At installation or planting, all plant material shall meet the following specifications:

i. Shrubbery shall be a minimum three (3) gallon container size.

ii. All evergreen and medium-maturing trees shall be no less than ten (10) gallon container size or one and one-half (1½) inch caliper, balled and burlapped.

iii. All large-maturing trees shall be not less than fifteen (15) gallon container size or two (2) inch caliper, balled and burlapped.

iv. All plant material shall comply with ANSI Z60.1-2004: American Standard Nursery Stock - American Nursery and Landscape Association.

e.) Location of proposed view and access corridors per the Exceptions Requiring a Permit provisions of this section.

f.) A double row of silt fence (with metal posts and wire backing) or other sediment/erosion control device approved by the Stormwater Manager shall be shown on the project boundary side of the buffer area.

Table 3-19 VEGETATION DENSITIES FOR RESTORATION OF BUFFERS DISTURBED PRIOR TO DEVELOPMENT			
Vegetation Type	**Number of Plantings**	**Coverage**	**Minimum Number of Species**
Large-Maturing Tree	1	Per 200 sq. ft.	3
Small-Maturing Tree or Shrubbery	1	Per 100 sq. ft.	4
Groundcover Plugs	70	Per 100 sq. ft.	1
Groundcover Seedlings*	General seed broadcast	Complete coverage of bare soil	1
*Groundcover may be planted utilizing plugs or seed broadcasting, or a combination of both methods.			

3.) **Minimum Mature Size** - Plant material shall be selected that will meet the following specification at maturity:

a.) Evergreen plant material and medium-maturing trees shall attain a minimum average of twenty-five (25) feet in height.

b.) Deciduous large-maturing trees shall attain a minimum average of thirty-five (35) feet in height.

4.) **Maintenance of Restored Buffer** - The maintenance of planted materials in restored buffer areas shall be the responsibility of the property owner. All such areas shall be properly maintained so as to ensure continued buffering. Dead or diseased plants shall be removed and replaced. Replacement plants shall be of similar type and sized per the installation of planted material.

C. **Developed Parcels** - The following shoreline buffer requirements apply to all parcels of land contiguous to the project boundary that have been developed prior to the effective date of this Ordinance. Any subsequent development and/or subdivision of such parcels shall comply with the Lake Wateree Shoreline Buffer Regulations of this section.

1. **Nonconforming Structures** - Any structure located within the buffer or under construction on a lot existing as of the effective date of this Ordinance, including dwellings, barns, outbuildings, garages, carports, guesthouses, patios, decks, outdoor recreation structures, or water-dependent structures such as docks, boathouses, or piers, shall be allowed to remain as a nonconforming structure. The property owner must be able to document its prior existence through property tax records, building permits, contracts for construction, or other clear evidence. Work within the existing footprint of a nonconforming structure may be undertaken for purposes of maintenance, repair, and renovation of the nonconforming structure lying within the shoreline buffer. In any such case, however, the nonconformity may not be expanded or the use of the nonconforming structure altered except as provided below under the regulations for Expansion of Non-Conforming Principal Residential Structures within the Buffer Area.
2. **Non-Encroachment** - No new structure including dwellings, barns, outbuildings, garages, carports, guesthouses, patios, decks, or outdoor recreation structures shall be permitted to encroach on the fifty (50) foot buffer zone perpendicular to the project boundary.

3. **Water-Dependent Structures -** Proposed water-dependent structures such as docks, boathouses, or piers must be submitted to Duke Energy for their authorization under the Duke Energy Shoreline Management Guidelines Private Facilities Program.
4. **Enhancement of Buffers on Developed Single-Family Residential Parcels -** Enhancement, restoration, and/or reestablishment of shoreline buffers on land developed prior to the effective date of this Ordinance is strongly encouraged. For redevelopment projects on such parcels that will require a land development and/or building permit, buffers are a preferred best management practice for sediment and erosion control and stormwater management. The Kershaw County Stormwater Manager may require the enhancement, restoration, and/or reestablishment of water quality buffers (including shoreline buffers) on any parcels of land, structures, and activities which are causing or contributing to pollution, including non-point pollution of the waters of Kershaw County; erosion or sedimentation of stream channels; and/or degradation of aquatic or riparian habitat.

   In areas in which the natural buffer has been disturbed or compromised, the buffer may be enhanced with additional plantings. When landscaping within the buffer is conducted as a means of enhancing the natural buffer, it shall be performed manually and without the use of vehicular or mechanical equipment to the greatest extent practicable, and stringent sediment and erosion controls shall be utilized to protect the Lake from siltation as a result of landscaping activities. Planting of native and adaptive species is encouraged. The planting of invasive species is not allowed. A list of native and adaptive species is available from the Planning and Zoning Department.

   a. **Expansion of Non-Conforming Principal Residential Structures within the Buffer Area -** Further expansion of the footprint of existing non-conforming principal residential structures into the required buffer area during building renovations or reconstruction shall not be allowed unless it can be demonstrated that, due to specific site constraints, the proposed renovations or reconstruction cannot be accomplished without further expansion into the required buffer area. In such cases, expansion into the buffer shall be allowed upon the submittal of a mitigation plan prepared by a qualified Profession Engineer. This provision applies only to the principal residential structure, not detached garages, sheds, patios, or other detached secondary structures.

      The mitigation plan shall demonstrate the expansion can be accomplished without sacrificing water quality protection as to erosion prevention and sediment control and nutrient, pesticide, and biocontaminant (fecal coliform) removal. Mitigation may include buffer enhancement and restoration as provided under the Restoration Plan provisions of this section, and other stormwater pollution prevention controls such as rain gardens, bio-retention cells, and infiltration trenches. Mitigation plans shall be reviewed and approved by the Stormwater Manager.
5. **Restoration of Buffers on Previously Developed Multi-Family and Non-Residential Parcels**
   a. **Applicability -** These provisions apply to the redevelopment of multi-family residential, commercial, industrial, and institutional buildings (group developments) in which the shoreline buffer has been disturbed through logging or other activity prior to the effective date of this Ordinance. The fifty (50) foot buffer shall be restored prior to obtaining a new land development and/or building permit.

b. **Restoration Plan -** In areas in which the natural shoreline buffer has been disturbed or compromised, the buffer shall be enhanced with additional plantings within the fifty (50) foot buffer zone perpendicular to the project boundary. When landscaping within the buffer is conducted as a means of restoring the natural buffer, it shall be performed manually and without the use of vehicular or mechanical equipment to the greatest extent practicable, and stringent sediment and erosion controls shall be utilized to protect the Lake from siltation as a result of landscaping activities. Planting of native and adaptive species is encouraged. The planting of invasive species is not allowed. A list of native and adaptive species is available from the Planning and Zoning Department. The applicant shall submit a shoreline buffer restoration plan to the Planning and Zoning Office which must be approved prior to the issuance of a land development and/or building permit. Final project certification of approval shall not be issued until the approved shoreline buffer restoration plan has been implemented and inspected. The plan shall include:

1.) Existing conditions of the shoreline buffer zone, to include the location and species of all trees over four (4) inches DBH, and existing non-conforming structures.
2.) Landscape plan and planting schedule showing location and species of new plantings within the buffer zone.
3.) Vegetation Density of the Restored Shoreline Buffer - Utilize existing vegetation and augment with new plantings to achieve the following minimum densities:

Table 3-20 VEGETATION DENSITIES FOR PREVIOUSLY DEVELOPED MULTI-FAMILY AND NON-RESIDENTIAL PARCELS

Vegetation Type	Number of Plantings	Coverage	Minimum Number of Species
Large-Maturing Tree	1	Per 200 sq. ft.	3
Small-Maturing Tree or Shrubbery	1	Per 100 sq. ft.	4
Groundcover Plugs	70	Per 100 sq. ft.	1
Groundcover Seedlings*	General seed broadcast	Complete coverage of bare soil	1
*Groundcover may be planted utilizing plugs or seed broadcasting, or a combination of both methods.			

4.) At installation or planting, all plant material shall meet the following specifications:
   a.) Shrubbery shall be a minimum three (3) gallon container size.
   b.) All evergreen and medium-maturing trees shall be no less than ten (10) gallon container size or one and one-half (1½) inch caliper, balled and burlapped.
   c.) All large-maturing trees shall be not less than fifteen (15) gallon container size or two (2) inch caliper, balled and burlapped.
   d.) All plant material shall comply with ANSI Z60.1-2004: American Standard for Nursery Stock - American Nursery and Landscape Association.
5.) Location of proposed view and access corridors per the Exceptions Requiring a Permit section of this Article.

6.) A double row of silt fence (with metal posts and wire backing) or other sediment/erosion control device approved by the Stormwater Manager shall be shown on the project boundary side of the buffer area.

c. **Minimum Mature Size** - Plant material shall be selected that will meet the following specifications at maturity:
   1.) Evergreen plant material and medium-maturing trees shall attain a minimum average of twenty-five (25) feet in height.
   2.) Deciduous large-maturing trees shall attain a minimum average of thirty-five (35) feet in height.

d. **Maintenance of Restored Buffer** - The maintenance of planted materials in restored buffer areas shall be the responsibility of the property owner. All such areas shall be properly maintained so as to ensure continued buffering. Dead or diseased plants shall be removed and replaced. Replacement plants shall be of similar type and sized per the installation of planted material requirements located in the previous section.

D. **Protection of Shoreline Buffers During Site Development and Construction Activity** - A shoreline buffer plan, ensuring the following safeguards shall be included in all required sediment and erosion control plans, as applicable:
   1. Shoreline buffers must be clearly identified on all stormwater management plans and construction drawings, and must be marked with the statement "Shoreline Buffer. Do Not Disturb."
   2. Shoreline buffers cannot be encroached upon or disturbed during project construction, unless in accordance the General Exceptions and the Exceptions Requiring a Permit provisions of this section, or unless they are being established, restored, or enhanced in accordance with an approved buffer restoration plan.
   3. Shoreline buffers must be clearly marked with a warning barrier before construction activities begin. The marking shall be maintained until completion of construction activities. All contractors and others working on the construction site must be made aware of the existence of the buffer(s) and the restrictions on disturbing the buffer(s).
   4. All areas of the shoreline buffer must be left in the existing condition upon completion of construction activities. Should construction activities associated with development cause degradation to the buffer, all eroding, bare, or unstable areas shall be restored to existing conditions.
   5. If any trees are allowed to be removed, the tree location shall be shown and a note provided stating that the tree must be hand cleared.
   6. The locations of all signage must be clearly shown on plans.
   7. A narrative stating the extent of the buffer areas, including any allowed disturbance in the buffer areas must be included with the plans.
   8. A double row of silt fence (with metal posts and wire backing) or other sediment/erosion control device approved by the Stormwater Manager shall be shown on the project boundary side of the applicable buffer area(s).

E. **Shoreline Buffer Plat Requirements** – The Lake Wateree shoreline buffer shall be shown on all applicable land development application site plans and on all final plats prepared for recording as follows:
   1. Show the extent of the shoreline buffer on the subject property by metes and bounds.
   2. Label the shoreline buffer.

3. Provide a note to reference all buffers stating, "There shall be no clearing, grading, construction or disturbance of vegetation except as permitted by the Kershaw County Planning Official."
4. Provide a note to reference any protective covenants governing all buffer areas stating, "Any buffer shown on the plat is subject of protective covenants which may be found in the land records and which restricts disturbance and use of these areas."
5. If the buffer area will not be part of an individually-owned lot, then ownership must be stated by identifying who is the responsible party.

3:7.4-7 Sediment and Erosion Controls for Residential Lot Development

Sediment and erosion controls for land development applications for major subdivisions, large acreage residential developments on private roads, minor group developments, major group developments, and planned development districts (PDDs) within the LWOD shall be regulated per the respective permitting process in the land development regulations of Article 5 of this Ordinance. For residential lots created through minor and exempt subdivision of property, or individually owned parcels being developed for residential uses, the individual homebuilder shall be responsible for implementing sediment and erosion controls as a condition to obtaining a building permit. In addition, when a developer of a major subdivision, large acreage residential development on a private road, or a PDD has completed the grading activities, utility installation, building of roads, and has recorded the final plat then sells a lot or group of lots over to a homebuilder(s), then the homebuilder shall likewise be responsible for implementing sediment and erosion controls as a condition to obtaining a building permit.

A. **Residential Building Sediment and Erosion Control Certification -** Prior to the issuance of a residential building permit in the LWOD to an individual homebuilder as defined above, the homebuilder (permit holder) shall sign a certification containing the following conditions:

> "I certify under penalty of law that I understand and will implement the County's Sediment and Erosion Control (SEC) requirements specified below. I will ensure that the SEC measures are maintained. I further certify that Kershaw County inspectors may enter the property as necessary to ensure compliance with all related requirements."

1. The lot shall have SEC protection around the entire boundary of the area of disturbance with allowances for no more than two (2) entrances/exits. This protection may be silt fencing, earthen or man-made berms or dikes, sediment tubes, or other controls as approved by the Kershaw County Stormwater Manager. These measures shall be installed within twenty-four (24) hours of land disturbance and maintained until the project is stabilized as detailed below. The following guidelines shall be followed:
   a. The maximum length from the crest of a hill to the fence or other control is 100 feet. When the distance from a crest to the property boundary is greater than 100 feet, an intermediate row of silt fencing shall be used or another SEC measure shall be employed.
   b. The maximum slope steepness (normal [perpendicular] to fence line) shall be two to one (2:1 or 50%). When exceeded, slope drains shall be employed.
   c. A maximum of one-forth (¼) acre drainage area per 100 linear feet of silt fence should be used. When this is exceeded, an intermediate row of silt fence shall be used or another SEC measure shall be employed.

d. Sediment accumulated along the fence shall be removed when it reaches one third (⅓) the height of the fence.
e. Contact the Stormwater Manager, County Engineer, or Public Works Department for correct installation of silt fencing or alternate SEC controls. Where applicable, consult the manufacturer's recommended installation and maintenance procedures as applicable.

2. Nearby stormwater inlets, manholes, etc. in the street or adjacent property shall be protected through the use of sediment tubes, check dams, or inlet protection devices. These measures shall be maintained throughout the construction process until the site is stabilized as detailed below. Maintenance requirements are specified in the SCDHEC *Best Management Practices Manual*.
3. Construction entrances shall be provided at all entrances/exits (maximum of two). The entrance shall contain washed stone that is at least six (6) inches deep, twenty (20) feet wide, and fifty (50) feet long. The stormwater manager may approve a shorter driveway length due to specific site conditions. The stone shall be maintained throughout the construction process until the site is stabilized as detailed below. Sediment tracked onto streets shall be removed weekly. Additional information on the installation and maintenance of the construction entrances can be obtained from the Stormwater Manager, County Engineer, and the Public Works Department.
4. All SEC shall be inspected every seven (7) calendar days and within twenty-four (24) hours after each rainfall event that produces one-half (½) inches or more of precipitation.
5. Construction debris and other waste shall be contained in a dumpster or covered with plastic. Covers that prevent exposure to precipitation shall also be used for stockpiles of soil. Chemicals, paints, solvents, and other materials shall be stored such that exposure risk to precipitation and stormwater runoff is low. Concrete wash water shall be disposed in an area of soil away from surface waters where soil can act as a filter or allow the water to evaporate. Be aware that this water can kill vegetation. Remaining cement shall be disposed of in a dumpster or otherwise removed from the site. De-watering water shall be disposed of in a pervious area. Discharge of sediment from dewatering operations shall be prevented from entering into storm sewers and surface waters.
6. Areas not used during construction should be vegetated with sod or grass seed. Existing/natural vegetation should be preserved as much as possible. Grass specifications are available from the Stormwater Manager and Planning and Zoning Department.
7. A site is considered stabilized once the entire area other than buildings, driveways, and walkways has vegetative cover with a density of seventy (70) percent. Seeding should be accompanied or replaced with erosion control mats as necessary to achieve this density.
8. After final stabilization is achieved, all SEC measures shall be removed from the site.
9. The general regulations of the stormwater management standards in Article 5 of this Ordinance shall also apply.

3:7.4-8 Lake Wateree Overlay District On-Site Sewage Disposal System Regulations

A. **Definitions**

Failed System - A failed system means any sewage disposal system that does not adequately treat and dispose of sewage that consequently creates a public or private nuisance or threat to public health and/or environmental quality as evidenced by, but not limited to, one (1) or more of the following conditions:

1. Failure to accept sanitary sewage into the building sewer.
2. Discharge of sanitary sewage to a basement, subsurface drain, surface drain, or surface water unless expressly permitted by SCDHEC.
3. Sanitary sewage rising to the surface of the ground over or near any part of an onsite wastewater disposal system (OSDS) or seeping down-gradient from the drain field at any change in grade, bank, or road cut.
4. Any deterioration or damage to any OSDS that would preclude adequate treatment and disposal of wastewater. For example, damage from a vehicle driven over the drain field or septic tank.
5. A septic tank that is not constructed to be watertight (e.g., bottomless tank) as required to hold wastewater for primary treatment prior to discharging to a drain field.
6. The presence of a grease trap to which kitchen waste is discharged and which is not connected to the septic tank or drain field.

Good Operating Condition - Good operating condition means an OSDS that, upon inspection, is determined to function in a sanitary manner; prohibits the discharge of untreated or partially treated wastewater onto the ground surface, into surface water, or into ground water; and allows building plumbing to discharge rapidly.

Inspector - Any person licensed by SCDHEC to install, repair, service, monitor, or inspect an OSDS. At such time as regularly scheduled SCDHEC Septic System Inspector Training Workshops become available, inspectors shall successfully complete such workshops.

On-Site Sewage Disposal System (OSDS) - Any system, piping, tanks, drain fields, alternate toilets, or other facilities designed to function as a unit to convey, store, treat, and/or dispose of sanitary sewage by means other than discharge into a public sewer. For purposes of this regulation an OSDS shall mean any septic tank or other on-site sewage disposal system.

B. **Applicability** - These regulations shall apply to all new and existing OSDS installations within the Lake Wateree Overlay District. In no way do the provisions of these regulations abrogate the powers and duties of SCDHEC of their responsibilities for the permitting and enforcement of wastewater systems.

C. **New Installations** - Any new or replacement OSDS installed within the LWOD shall be required to include an access manhole built into the lid over each compartment of the tank, and over the outlet end of the septic tank with risers and access manholes extending to within six (6) inches of the ground surface. An appropriate mechanism shall be provided to make the access manholes vandal, tamper, and child resistant.

D. **Inspections of Existing Installations** - The following regulations shall apply to all OSDS within the LWOD installed prior to the effective date of this Ordinance, as well as all OSDS within the LWOD installed subsequent to the effective date of this Ordinance.

1. **Inspections Prior to Sale of Real Estate Interest -** As of the effective date of this Ordinance, prior to the sale of any ownership interest of a lot containing an OSDS, the seller of interest shall provide the buyer with a written inspection report of the system prepared by an inspector. Sale of ownership interest does not include the conveyance by gift or inheritance from one family member to another. The inspection shall occur no earlier than sixty (60) days prior to the sale. Prior to the inspection, a pump-out of the septic tank is required to insure a proper inspection of the interior of the tank, to check for leaks from the building, and to check for saturated conditions in the drain field. A copy

of the inspection report and sewage disposal manifest from the pumping contractor shall be submitted to the Building Official within ten (10) days of the inspection. The inspection report shall certify that the system is in good operating condition. Otherwise, the following actions shall be taken:

a. **Minor Repairs or Alterations -** If the inspector determines that minor repairs or alterations are needed to bring the OSDS into good operating condition (such as replacing cracked lids and missing or broken tees and baffles), such work shall be done within ninety (90) days of the inspection. Evidence of said work shall be submitted to the buyer or prospective buyer and a copy submitted to the Building Official.

b. **Failure Evaluation and Repairs -** If the inspector determines that the OSDS has failed, as herein defined, the Building Official shall notify SCDHEC of the failure within five (5) days of receiving the inspection report. The property owner shall:

1.) Contact SCDHEC within fifteen (15) days of the inspection to request a failure evaluation and course of corrective action by a licensed contractor.

2.) Submit evidence of repairs to the buyer or prospective buyer and the Building Official within sixty (60) days of repairs.

2. **Inspections Prior to Renovations -** As of the effective date of this Ordinance, prior to the issuance of a building permit for renovations, the applicant shall provide to the Building Official a written inspection report of the system prepared by an inspector. For purposes of this regulation a renovation shall mean any addition (including structural and plumbing fixtures with waste lines), replacement, demolition, and reconstruction, or modification of an existing structure on the subject property such that the renovation results in an increased flow into the system, or adds bedroom(s) and/or significant water-using fixtures to the structure (bathroom, hot tub, laundry room, etc.). Sewage flows shall be determined in conformance to SCDHEC Regulation 61-56. Prior to the inspection, a pump-out of the septic tank is required to insure a proper inspection of the interior of the tank to check for leaks from the building, and to check for saturated conditions in the drain field. A copy of the inspection report and sewage disposal manifest from the pumping contractor shall be submitted to the Building Official within ten (10) days of the inspection. The inspection report shall certify that the system is in good operating condition. Otherwise, the following actions shall be taken:

a. **Minor Repairs or Alterations -** If the inspector determines that minor repairs or alterations are needed to bring the OSDS into good operating condition (such as replacing cracked lids and missing or broken tees and baffles), such work shall be done within ninety (90) days of the inspection. Evidence of said work shall be submitted to the Building Official.

b. **Failure Evaluation and Repairs** - If the inspector determines that the OSDS has failed, as herein defined, the Building Official shall notify SCDHEC of the failure within five (5) days of receiving the inspection report. The property owner or his contractor shall:

1.) Contact SCDHEC within fifteen (15) days of the inspection to request a failure evaluation and course of corrective action by a licensed contractor.

2.) Submit evidence of repairs to the Building Official within sixty (60) days of repairs.

3. **Inspections Prior to Change of Occupancy -** As of the effective date of this Ordinance, prior to the issuance of a use permit and any subsequent required building permits for a change of occupancy that is likely to result in an increase in sewage flow into the system, the applicant shall provide the Building Official with a written inspection report of the system prepared by an inspector. Sewage flows shall be determined in conformance to SCDHEC Regulation 61-56. Prior to the inspection, a pump-out of the septic tank is required to insure a proper inspection of the interior of the tank, to check for leaks from the building, and to check for saturated conditions in the drain field. A copy of the inspection report and sewage disposal manifest from the pumping contractor shall be submitted to the Building Official within ten (10) days of the inspection. The inspection report shall certify that the system is in good operating condition. Otherwise, the following actions shall be taken:
   a. **Minor Repairs or Alterations -** If the inspector determines that minor repairs or alterations are needed to bring the OSDS into good operating condition (such as replacing cracked lids and missing or broken tees and baffles), such work shall be done within ninety (90) days of the inspection. Evidence of said work shall be submitted to the Building Official.
   b. **Failure Evaluation and Repairs -** If the inspector determines that the OSDS has failed, as herein defined, the Building Official shall notify SCDHEC of the failure within five (5) days of receiving the inspection report. The property owner or his contractor shall:
      1.) Contact SCDHEC within fifteen (15) days of the inspection to request a failure evaluation and course of corrective action by a licensed contractor.
      2.) Submit evidence of repairs to the Building Official within sixty (60) days of repairs.
4. **Time Between Inspections** - If an inspection has been conducted pursuant to a sale of real estate interest or a change of occupancy within three years of a subsequent sale of real estate interest or change of occupancy of the subject site, a new inspection shall not be required unless the sale or change of occupancy will result in increased sewage flow into the system.
5. **Specialized (Engineered) Onsite Wastewater Systems** - This section applies to specialized onsite wastewater systems that have been permitted and installed in accordance with SCDHEC Regulations R.61-56 system standards for specialized onsite wastewater system designs (less than 1500 GPD).

   Specialized onsite wastewater systems are exempted from the inspections prior to sale of real estate interest, prior to renovations, and prior to change of occupancy under the following condition:
   a. Upon submittal of documentation that the specialized onsite wastewater system has been inspected and maintained in accordance with the manufacturer's recommendations for operation and maintenance of the system, as well as the consulting Professional Engineer's plans for compliance of the manufacturer's recommendations. If such documentation cannot be presented, an inspection shall be required to certify that the manufacturer's recommendations for operations and maintenance of the system are current and that the system is functioning satisfactorily in accordance with the consulting Professional Engineer's plan.

3:7.4-9 Compliance, Penalties, and Violations

Failure to comply with the requirements of the Lake Wateree Overlay District regulations shall be cause for a "Stop Work" order on applicable permits. New permits or "Resume Work" orders shall not be issued until all requirements of this Ordinance are met and the required fines are paid through the courts. Any person, firm, or corporation in violation of any provision of the LWOD regulations shall, upon conviction, be guilty of a misdemeanor and fined or imprisoned per the provisions of the Administration article of this Ordinance.

ARTICLE 4
BUILDINGS AND BUILDING REGULATIONS

4:1 GENERAL PROVISIONS

4:1.1 Definitions

Building Official - The chief building inspector who is designated a Certified Building Official by the International Code Council.

Building Permit - For purposes of this section the term *building permit* shall be synonymous with Development and Improvement Permit, Electrical, Mechanical, Plumbing, Gas, Roofing, and Residential Specialty permits as used on departmental forms.

County Building Codes - The most recent codes adopted by the South Carolina Building Code Council for use in the State of South Carolina and any additional codes that may be adopted by Kershaw County that have been approved by the South Carolina Building Code Council.

Manufactured Home - The term *manufactured home* means a structure, transportable in one (1) or more sections which, in the traveling mode, is eight (8) body feet or more in width or forty (40) body feet or more in length or when erected onsite is three hundred twenty (320) or more square feet and which is built on a permanent chassis and designed to be used as a dwelling with or without permanent foundation when connected to the required utilities and includes the plumbing, heating, air conditioning, and electrical systems contained in it.

Mobile Home - A factory-built home built prior to enactment of the Federal *Manufactured Housing Construction and Safety Standards Act*, effective June 15, 1976.

Modular Building - Any closed construction other than a mobile or manufactured home, constructed and certified off-site in accordance with South Carolina Building Code Council standards and codes, and transported to the point of use for installation or erection.

Planning Official - The Planning and Zoning Director or the designated Building Official or other Planning and Zoning Department official designated by the Planning and Zoning Director to administer the provisions of this Ordinance.

4:1.2 Permit Required

Any owner or authorized agent who intends to construct, enlarge, alter, repair, move, demolish, or change the occupancy type or use of a building or structure, or to erect, install, enlarge, alter, repair, remove, convert, or replace any electrical, gas, mechanical, or plumbing system, the installation of which is regulated by the International Building Code, or to cause any such work to be done, shall first make application to the Building Official and obtain the required permit.

4:1.3 Expiration of Building Permit

If the work described in any building permit has not begun within six (6) months from the date of issuance thereof, said permit shall expire. Work shall not be deemed started until verified by a scheduled inspection. Furthermore, a building permit shall expire twenty-four (24) months after date of issuance. After expiration, a new permit must be purchased.

4:1.4 Compliance Required

All structures shall meet applicable County building codes and be inspected for compliance during construction and/or improvement.

No structure shall be used or occupied unless and until the structure has been constructed in accord with applicable building codes and inspected for compliance by the Planning Official or his designee.

Failure to secure inspection and approval prior to occupying such unit shall be a violation of this Ordinance.

The Planning Official shall prepare or cause to be prepared forms, guidelines, and policies pursuant to this Ordinance to facilitate the efficient, safe, and orderly implementation of the provisions of this Article. The Planning Official may waive minor requirements if the waiver of such requirements is not contradictory to the policies of this Ordinance and applicable State laws and regulations.

4:1.5 Applicant

A licensed contractor is required to obtain the building permit. For single-family residential units only, the property owner may obtain the building permit. However, if the property owner acquires the permit, the property owner must sign a disclosure statement, filed with the Register of Deeds, stating the property owner's responsibility to hire a licensed contractor for any work not performed by the property owner. The disclosure statement shall also stipulate that a home constructed under a building permit issued to the property owner cannot be sold, leased, or rented for a period of two years after completion of construction and the certificate of occupancy has been issued.

For all other development and improvement projects, the building permit must be obtained by a licensed contractor under all applicable International Residential Code (IRC) and International Building Code (IBC) provisions of the County building codes. The Planning and Zoning Department shall verify that the contractor has a current and valid residential or general contractor's license prior to issuing a permit. All contractors shall submit a copy of their license to the Planning and Zoning Department upon request.

4:1.6 Building Permit Procedure

The applicant must initially complete an application form; submit a copy of a recorded plat issued in the property owner(s)' name; obtain a 911 address if one has not been assigned; provide a SCDHEC septic tank permit or public sewer tap receipt; and provide additional information as may be required by the Planning Official. If the plat has not yet been recorded in the applicant's name, a recorded deed establishing ownership by the applicant shall be submitted.

4:2 RESIDENTIAL BUILDINGS

This section applies to all site-built and modular one unit (single-family detached), two unit (duplex), three unit (triplex), and four unit (quadraplex) residential dwellings, townhouses, and patio homes. A residential unit of five or more units is considered a multi-family dwelling, and the group development requirements of this Article shall apply.

4:2.1 Site-Built Housing

All site-built housing shall meet applicable County building codes, and be inspected for compliance during construction.

No site-built home shall be used or occupied unless and until the home has been constructed in accord with applicable building codes and inspected for compliance by the Building Official or his designee, and applicable compliance certification issued.

Failure to secure inspection and approval prior to occupying such unit shall be a violation of this Ordinance and processed accordingly.

4:2.2 Modular Housing/Buildings

Per the South Carolina *Modular Buildings Construction Act*, SC Code of Laws, Title 23, Chapter 43, certified modular buildings must be accepted equivalent to site-built structures. Certified modular housing must be allowed in all zoning districts in which site-built housing is allowed.

4:2.3 Manufactured Housing Installation, License, and Registration

4:2.3-1 Applicant

The manufactured housing owner may apply for a manufactured housing (MH) installation license and registration permit. The manufactured housing owner may submit a notarized statement authorizing the manufactured housing dealer or a licensed manufactured housing installer to apply for the permit.

4:2.3-2 Installer License

In order for a manufactured housing installation license and registration permit to be issued to install manufactured housing in Kershaw County, a photocopy of the current license of the installer or contractor, issued by the South Carolina Manufactured Housing Board, must be submitted with the application for the permit. If a retail dealer is installing the home, a current photocopy or an electronic submission of the retail dealer's license, issued by the South Carolina Manufactured Housing Board, must be submitted with the application for the permit.

4:2.3-3 Process

The applicant must initially complete an application form; submit a copy of a recorded plat issued in the property owner(s)' name; obtain a 911 address if one has not been assigned; submit a copy of the contract with the licensed installer to perform the installation; and provide additional information as may be required by the Planning Official. If the plat has not yet been recorded in the applicant's name, a recorded deed establishing ownership by the applicant shall be submitted.

The Official Zoning Map shall be checked to verify that manufactured housing is a permitted use in the zoning district. A site inspection shall be conducted to verify that the zoning district setbacks are met prior to issuing approval for installation.

Once site approval is issued, the applicant must file for a manufactured housing moving permit and must furnish septic tank approval from SCDHEC and proof of ownership of the manufactured housing that is acceptable to the Planning and Zoning Department such as the title or a copy of and the receipt for DMV form 400 Application for Certificate of Title.

4:2.3-4 Expiration of Permit

If the work described in the manufactured housing installation license and registration permit has not begun within six (6) months from the date of issuance thereof, said permit shall expire. Work shall not be deemed started until verified by a scheduled inspection. Furthermore, a manufactured housing installation license and registration permit shall expire twelve (12) months after date of issuance. After expiration, a new permit must be purchased.

4:2.3-5 Set Up

Manufactured housing shall be installed in accord with the installation manual issued by the manufacturer. The manufacturer's installation manual must be submitted to Kershaw County Planning and Zoning Department at the time of the application. In case of installation of previously owned manufactured housing where the manual is unavailable, the home must be installed in accord with the requirements of SC Manufactured Housing Board, under SC Code of Laws 40-29-350 and SC Regulations 79-42. Additional Kershaw County set up requirements are as follows.

A. Double-wide units (eighteen feet wide or wider) shall be underskirted with a curtain wall around the entire unit with mortared brick, mortared concrete masonry, or cement fiberboard. Single-wide units (less than eighteen feet wide) shall be underpinned around the entire unit with brick, masonry, cement fiberboard, vinyl, or similar materials designed and manufactured for permanent outdoor installation. The curtain wall and/or underpinning shall be designed and constructed for permanent outdoor installation and constructed in accord with the manufacturer's installation instructions, regulations promulgated in accord with applicable building code, and the provisions of this section.
    1. Proper installation of the curtain wall and/or underpinning must be insured and conform with the objectives and purposes of this Ordinance which are intended to promote stability, compensate for frost heave, and minimize vibrations and susceptibility to wind damage.
    2. Existing manufactured housing licensed and registered for residential purposes issued prior to September 27, 2005 (the initial effective date of these requirements) is exempt from the requirements of this section. A replacement of an exempt manufactured home destroyed or moved from a site with another unit is also exempt; provided that the replacement unit is installed within one year of the time of relocation, destruction, or discontinuance of use.
B. Permanent landing steps shall be installed or constructed at each exterior doorway in accord with applicable building codes.
C. All moving or towing apparatus shall be removed or concealed including hitch, wheels, and axles.

D. The unit shall be provided with a sanitary sewer system approved by SCDHEC. A SCDHEC certificate of final approval must be submitted prior to issuance of the license.
E. The unit shall be served by a separate electric meter. It shall be unlawful for any such home to receive electricity except by use of this separate meter. Any existing home not in compliance with this section upon the effective date of this Ordinance shall be served by a separate meter, or be declared by the Planning Official to be in violation of this Ordinance. It shall be unlawful for any public utility or electrical supplier to connect power to any manufactured housing in the absence of an approved permit issued by the Building Official to establish said home.

   The Planning Official or Building Official may, at his discretion, issue a temporary permit to secure electrical service for an extraordinary reason such as severe medical conditions or severe acts of nature. A temporary permit shall be valid for fifteen (15) days unless otherwise specified on the permit. This provision shall not be construed to exempt the applicant from the requirement for a regular manufactured housing installation license and registration permit within the fifteen (15) day period. If a permit is not obtained as required, the Planning Official or Building Official may direct that the electricity be disconnected. Any additional fee to reconnect will be the responsibility of the owner or applicant.

4:2.3-6 Appearance Standards for Manufactured Housing in the GD and MRD-1 Zoning Districts

Manufactured housing on individual lots where permitted by this Ordinance in the GD and MRD-1 districts shall:

A. Be underskirted with a curtain wall around the entire unit in accord with the requirements of this section.
B. Be covered with an exterior material customarily used on conventional dwellings.
C. Have a pitched roof with a minimum of three (3) inch vertical rise for each twelve (12) inches of horizontal run. Said roof shall consist of shingles or other material customarily used for conventional dwellings.
D. Have a roof overhang not less than eight (8) inches measured from the vertical side of the structure. When carports, garages, porches, or similar structures are attached as an integral part of the unit, the Building Official may waive the eave requirement.
E. Be not less than twenty (20) feet wide (multi-section), be not less than 900 square feet in floor area, and be placed on the lot in such a manner that is compatible with and reasonably similar in orientation to surrounding site-built housing.

4:2.3-7 Habitability

No manufactured housing shall be permitted, used, or occupied, nor shall public utilities be extended to or activated in any such home unless and until the home has been inspected and found to be habitable by the Building Official or his designee.

The word *habitable* as used herein means that there is no defect, damage, or deterioration to the home which creates a dangerous or unsafe situation or condition; that the plumbing, heating, and electrical systems are in safe working order; that the walls, floor, and roof are free from any holes, breaks, loose or rotting boards, and are structurally sound; and that all exterior doors and windows are in place. Further, the word *habitable* shall include the provisions of the SC Manufactured Housing Board regulations 79-43, Used Manufactured Housing Minimum Habitability Requirements, and shall include the provision of the following facilities:

A. **Sanitary Facilities** - Every manufactured home shall contain not less than a kitchen sink, lavatory, tub or shower, and a water closet all in good working condition and properly connected to an approved water and sewer/septic system. Every plumbing fixture, water, and waste pipe shall be properly installed and free from defects, leaks, and obstructions.
B. **Hot and Cold Water Supply** - Every manufactured home shall have connected to the kitchen sink, lavatory, and tub or shower cold and hot running water. All water shall be supplied through an approved distribution system connected to a potable water supply.
C. **Heating Facilities** - Every manufactured home shall have heating facilities which are properly installed and maintained in safe and good working condition, and are capable of safely and adequately heating all habitable rooms and bathrooms. Where a central heating system is not provided, each mobile or manufactured home shall be provided with an alternative system, approved by the Planning Official.
D. **Cooking and Heating Equipment** - All cooking and heating equipment and facilities shall be installed in accordance with Federal manufactured home construction and safety standards.
E. **Smoke Detector** - Every mobile and manufactured home shall be provided with an approved listed smoke detector, installed in accordance Federal manufactured home construction and safety standards. When activated, the detector shall provide an audible alarm.

4:2.3-8 Compliance Required

No manufactured housing shall be used or occupied unless and until the home has been installed in accord with these regulations and inspected for compliance by the Building Official or his designee.

Where, upon inspection by the Building Official or his designee, a manufactured home is found not to meet the minimum requirements of habitability described herein, said official shall take appropriate action to require the owner to make the necessary improvements to render the unit habitable; or block the use and placement of said unit by refusing to issue an installation permit, and denying electricity to the unit, and/or require the removal of said unit at the owners' expense.

Failure to secure final inspection and registration and license prior to occupying such unit shall be a violation of this Ordinance and processed accordingly.

The Planning Official may grant exceptions to this requirement in hardship cases, not to exceed 30 days.

4:2.3-9 Registration and License

Upon passing final inspection and documentation of meeting all applicable requirements of this Ordinance, the manufactured housing shall be registered with the County, and a State license (sticker) shall be issued to the owner. The license sticker shall be adhered to the inside of a window facing the road.

4:2.4 Mobile Homes

A mobile home is a factory-built home built prior to enactment of the *Federal Manufactured Housing Construction and Safety Standards Act*, effective June 15, 1976.

A mobile home, as herein defined, shall not be established within the unincorporated area of Kershaw County. However, the use of an existing mobile home may be continued in accord with

the provisions of the nonconformities section of this Ordinance, and/or relocated to another site, lot, or parcel within the RD-2 District provided:

A. The mobile home is currently registered in Kershaw County.
B. The mobile home has been used as a residence within 365 days of the date of the moving permit application.
C. The mobile home meets all setup, habitability, and compliance requirements of this Ordinance.

4:2.4-1 Replacement of Mobile Homes

A nonconforming mobile home, once removed, shall not be replaced by a mobile home, but may be replaced by a manufactured home, provided such manufactured home is in full compliance with the requirements of the manufactured housing installation, license, and registration regulations of this Ordinance.

4:2.5 Existing Septic Tanks

4:2.5-1 Definitions

On-Site Sewage Disposal System (OSDS) - Any system, piping, tanks, drain fields, alternate toilets, or other facilities designed to function as a unit to convey, store, treat, and/or dispose of sanitary sewage by means other than discharge into a public sewer. For purposes of this Ordinance, an OSDS shall mean any septic tank or other on-site sewage disposal system.

Good Operating Condition, Septic System - Good operating condition means an on-site sewage disposal system (OSDS) that, upon inspection, is determined to function in a sanitary manner; prohibits the discharge of untreated or partially treated wastewater onto the ground surface, into surface water, or into ground water; and allows building plumbing to discharge rapidly.

Failed Septic System - Any sewage disposal system that does not adequately treat and dispose of sewage that consequently creates a public or private nuisance or threat to public health and/or environmental quality.

4:2.5-2 Procedures for Existing Septic Tanks

A residential property owner who applies to replace an existing or former structure that is or was serviced by an existing septic tank (On-site Sewage Disposal System) shall submit to Planning and Zoning a SCDHEC-approved permit for the existing septic tank. If the replacement structure's calculated sewage flow exceeds the permitted capacity, SCDHEC will require a permit to modify the system to handle the increased capacity.

If the applicant cannot produce the permit, the property owner shall either sign a statement on a form prepared by the Planning Official certifying that there is an existing septic tank, or obtain a current SCDHEC septic tank permit. If the property owner signs the existing septic tank certification, he shall be required to have the existing septic tank inspected by a person licensed by SCDHEC to install, repair, service, monitor, or inspect a septic tank. At such time as regularly scheduled SCDHEC septic system inspector training workshops become available, inspectors shall successfully complete such workshops.

4:2.5-3 Inspection Procedure

The inspector shall first verify that an OSDS (septic tank) is installed on the subject property. If the inspector determines that an OSDS as herein defined is not installed, he shall report his findings to the Building Official within five (5) days of the determination.

If a septic tank is located, prior to the inspection, a pump-out of the septic tank is required to insure a proper inspection of the interior of the tank, and to check as applicable for leaks from the building, and to check as applicable for saturated conditions in the drain field. It may not be possible to determine leaks and drain field conditions on systems that have not been in use for an extended period of time.

A copy of the inspection report and sewage disposal manifest from the pumping contractor shall be submitted to the Building Official within ten (10) days of the inspection. The inspection report shall certify that the system is in good operating condition. Any limitations to the certification that the system is in good operating condition due to non-use of the system or other factors shall be noted on the report. Otherwise, the following actions shall be taken:

A. **Minor Repairs or Alterations -** If the inspector determines that minor repairs or alterations are needed to bring the septic tank into good operating condition (such as replacing cracked lids and missing or broken tees and baffles), such work shall be done within ninety (90) days of the inspection. Evidence of said work shall be submitted to the property owner and a copy submitted to the Building Official as a condition of compliance.
B. **Failure Evaluation and Repairs -** If the inspector determines that the septic tank has failed as defined herein, the Building Official shall notify SCDHEC of the failure within five (5) days of receiving the inspection report. The property owner shall:
   1. Contact SCDHEC within fifteen (15) days of the inspection to request a failure evaluation and course of corrective action by a licensed contractor.
   2. Submit evidence of repairs to the Building Official as a condition of compliance.

4:3 GROUP DEVELOPMENTS

A group development is a development of a single tract of land or adjacent tracts of land under the same ownership or control. Group developments include commercial, retail, industrial, institutional, multi-family residential, and manufactured home parks, and are classified as major or minor group developments.

4:3.1 Applicant

Multi-family, commercial, industrial, institutional, and other non-residential building permits shall be issued to licensed general and mechanical contractors. The Planning and Zoning Department shall verify that the contractor has a current general and/or mechanical contractor's license prior to issuing a permit. All contractors shall submit a copy of their license to Planning and Zoning upon request.

4:3.2 Major Group Developments

4:3.2-1 Definition of Major Group Developments

Major group developments are as follows:

A. **Commercial, Industrial, Institutional** - A group commercial, industrial, or institutional development consists of a multiple use or multiple occupant commercial, industrial, or institutional complex of a combined 25,000 square feet or greater of gross floor area, or a single-use, single-occupant commercial or industrial building of 25,000 square feet or greater of gross floor area. Examples are shopping centers and malls; commercial business or industrial parks; and "big box" retail.
B. **Housing** - A group housing development consists of:
   1. Multi-family apartment buildings, duplexes, triplexes, quadruplexes, and townhouses on a single tract of land or adjacent tracts of land under the same ownership or control containing a combined total of more than ten (10) dwelling units.
   2. Manufactured Home Parks - All manufactured home parks are classified as major group developments.

4:3.2-2 Procedure for Major Group Developments

Applications for major group developments shall follow the same procedure as for minor group developments as listed below. Major group developments require Planning and Zoning Commission review and approval and additional submittal requirements per the land development submittal requirements of Article 5 of this Ordinance.

4:3.3 Minor Group Developments

4:3.3-1 Definition of Minor Group Developments

Minor group developments are as follows:

A. Commercial, industrial, or institutional developments that consist of a multiple use or multiple occupant commercial, industrial, or institutional complex of a combined square footage of less than 25,000 gross floor area, or a single-use, single-occupant commercial or industrial building of less than 25,000 square feet of gross floor area.
B. Multi-family apartment buildings, duplexes, triplexes, quadruplexes, and townhouses on a single tract of land or adjacent tracts of land under the same ownership or control containing a combined total of more than two (2) and no more than ten (10) dwelling units.

4:3.3-2 Procedure for Minor Group Developments

The applicant must initially complete an application form(s); submit a copy of a recorded plat issued in the property owner(s)' name; obtain a 911 address if one has not been assigned; and provide additional information as may be required by the Planning or Building Official.

The Building Official shall review the application and shall notify the applicant of the building plans (construction drawings) required. The applicant must submit two sets of building plans as required by the Building Official and by the latest edition of the State of South Carolina Department of Labor, Licensing and Regulation *Reference Manual for Building Officials and Design Professionals*. The Building Official shall make a plans review determination, and building plans, as required, shall be reviewed and approved before a permit is issued. Building construction per the approved building plans shall be completed prior to the issuance of a certificate of occupancy.

The applicant must submit two (2) sets of zoning and land development site plans addressing off-street parking; buffering, screening, and landscaping requirements; resource conservation; and other provisions required by this Ordinance as determined by the Planning Official. The

Planning Official shall prepare site plan guidance documents to aid the applicant in preparing the site plans. Zoning and land development site plans shall be approved prior to the issuance of the building permit. Site construction landscaping per the approved zoning and land development site plan shall be completed and approved prior to the issuance of a certificate of occupancy.

The applicant must submit two (2) sets of engineering (civil) plans and calculations that shall be in compliance with the applicable engineering specifications and standards of this Ordinance. The County Engineer shall prepare guidance documents to aid the applicant in preparing the engineering plans. Engineering site plans shall be approved prior to the issuance of the building permit. Site construction per the approved engineering site plan shall be completed and approved prior to the issuance of a certificate of occupancy.

4:4 BUILDING PERMIT INSPECTIONS FOR COMPLIANCE

4:4.1 Compliance Inspection

The Planning Official and/or Building Official may make or require inspections of any land disturbing activity, construction, or maintenance requirement to ascertain compliance with the provisions of this Ordinance and applicable building codes, and to ascertain compliance with approved permit applications, plats, and/or plans. The Planning Official and County Engineer shall establish inspection schedules.

4:4.2 Compliance Certification

4:4.2-1 Certification Required

As of the effective date of this Ordinance, it shall be unlawful to use, occupy, or permit the use or occupancy of any building or premises, or both, or parts thereof hereafter created, erected, changed, converted, or wholly or partly altered or enlarged in its use or structure until a use permit or certificate of occupancy shall have been issued therefore by the Planning Official or Building Official stating that the proposed use of the building or land conforms to the requirements of this Ordinance.

Failure to obtain the appropriate certificate of compliance shall be a violation of this Ordinance, and is punishable under the procedures outlined in the Administration article of this Ordinance.

4:4.3 Certificate of Occupancy

A certificate of occupancy is the compliance certification issued for buildings created, erected, altered, or enlarged under a building permit issued under the provisions of this Ordinance. The certificate of occupancy shall be issued by the Building Official or his designee upon an approval by final inspection.

4:4.4 Compliance Certifications for Demolition, Moving, Sign, and Other Land Development Permits

Upon documentation and site inspection that all items listed on the applicable permit application have been addressed and completed per the requirements of this Ordinance, a permit certification shall be signed by the Planning Official or the Building Official and issued to the applicant.

4:4.5 Use Permits

A use permit is the compliance certification issued when the use and/or occupancy of an existing structure has been changed, converted, or altered, upon determination by the Planning Official or Building Official that the proposed use of the building or land conforms to the requirements of this Ordinance.

4:4.5-1 Use Permits for Multiple Occupancy Establishments

A. The prospective occupant shall apply for a Kershaw County use permit and a determination is made that the proposed use is a permitted use or conditional use for the zoning district in which the establishment is located. If the use permit application is for a conditional use, the applicant shall be given the respective conditions for use, and sign that he has been given and shall comply with said conditions.
B. The unit of the establishment that the applicant will be occupying shall be inspected by the Building Official or his designee and other officials such as the jurisdictional Fire Marshall, depending upon the proposed use.
C. The inspection official(s) shall make a determination of what, if any, work will be needed on the unit to bring it into compliance with the building codes applicable for the proposed use, and notify the applicant of the work needed.
D. If required, the contractor for the applicant shall apply for the appropriate building permits (construction or specialty) to do the work to bring the unit into compliance.
E. Upon final inspection and approval by the inspection official(s) of the completed work, any required construction or specialty permit is signed as approved, the use permit is signed and issued, and the occupant may begin business operations.

4:4.5-2 Single Occupancy Use Permits for Change of Occupancy, Change of Use, or Conditional Uses

A. The prospective occupant shall apply for a Kershaw County use permit and a determination is made that the proposed use is a permitted use or conditional use for the zoning district in which the establishment is located. If the use permit application is for a conditional use, the applicant shall be given the respective conditions for use, and sign that he has been given and shall comply with said conditions.
B. The facility that the applicant is/will be occupying is inspected by the Building Official or Inspector and other officials such as the jurisdictional Fire Marshall, depending upon the proposed use.
C. The inspection official(s) will make a determination of what, if any, work will be needed on the facility to bring it into compliance with the building codes applicable for the proposed use, and notify the applicant of the work needed.
D. If required, the property owner/applicant or the contractor for the applicant shall apply for the appropriate permits (construction or specialty) to do the work to bring the facility into compliance.
E. Upon final inspection and approval by the inspection official(s) of the completed work, any required construction or specialty permit is signed as approved, the use permit is signed and issued, and the occupant may begin business operations.

4:5 DEMOLITION PERMITS

4:5.1 Demolition Permit Application for Structures Other Than Manufactured Housing

The application for a permit to demolish a structure other than a manufactured home shall be made on a form provided by the Planning and Zoning Department. The applicant may be the structure owner or the demolition contractor. The property owner must sign a statement to the effect that he has read and agrees to the scope of work that includes the following:

A. The arrangement for the disconnection of all utilities.
B. The capping of sewer or septic lines.
C. The complete demolition and/or removal of all structures and piles of debris including all foundations.
D. The proper disposal of all debris at SCDHEC-permitted solid waste processing and disposal facilities.
E. The removal of all rank vegetation and the cutting of grass and weeds.
F. The saving of and protection from damage during demolition and removal, all significant trees (twenty [20] inch or greater DBH pine trees, eight [8] inch or greater DBH all other species) per the Tree Protection regulations as prescribed in this Ordinance.
G. The grading of the lot as necessary to prevent low areas and to promote proper drainage.

If the applicant is not the property owner, a notarized statement, signed by the property owner must be submitted stating that the applicant has the owner's permission to demolish the structure under the above-stated terms.

The Planning Official may impose additional requirements to ensure the public health and safety.

4:5.1-1 Permit Certification

For structures other than manufactured housing, upon documentation and site inspection that all permit application items have been addressed and completed, a demolition permit certification shall be signed by the Building Official and issued to the applicant.

4:5.2 Demolition Permit Application for Manufactured Housing

The application for a permit to demolish a manufactured home shall be made on a form provided by the Planning and Zoning Department. The applicant may be the structure owner or the demolition contractor. The property owner must sign a statement to the effect that he has read and agrees to the scope of work that includes the following:

A. The arrangement for the disconnection of all utilities.
B. The capping of sewer or septic lines.
C. The complete demolition and/or removal of all structures and piles of debris including all foundations.
D. The proper disposal of all debris at SCDHEC-permitted solid waste processing and disposal facilities.
E. The removal of all rank vegetation and the cutting of grass and weeds.

F. The saving of and protection from damage during demolition and removal, all significant trees (twenty [20] inch or greater DBH pine trees, eight [8] inch or greater DBH all other species) per the Tree Protection regulations as prescribed in this Ordinance.
G. The grading of the lot as necessary to prevent low areas and to promote proper drainage.

The above regulations may be modified if another manufactured home is to be immediately placed on the existing foundation.

If the applicant is not the property owner, a notarized statement, signed by the property owner must be submitted stating that the applicant has the owner's permission to demolish the structure under the above-stated terms.

The Planning Official may impose additional requirements to ensure the public health and safety.

4:5.2-1 Permit Certification

An application for a manufactured housing demolition permit shall require two (2) site inspections as follows:
A. The first inspection shall be made during demolition or prior to removal of demolished unit to verify, if possible, that the manufactured home being demolished is the manufactured home on record and that the manufactured home has been demolished and not simply moved to another location.
B. The second inspection shall be made to verify that all conditions of Section 4:5.2 above have been met.

Upon documentation and site inspection that all permit application items have been addressed and completed, a manufactured housing demolition permit certification shall be signed by the Building Official and issued to the applicant.

A manufactured housing demolition permit shall be valid for thirty (30) days.

4:6 MOVING PERMITS

4:6.1 Moving Permit Application for Structure Other than Manufactured Housing

The application for a permit to move a structure other than manufactured housing shall be made on a form provided by the Planning and Zoning Department. The applicant may be the structure owner or the moving contractor. Moving permits are not required to move modular housing units purchased off a dealer's lot. If the applicant is not the property owner, a notarized statement, signed by the property owner must be submitted stating that the applicant has the owner's permission to move the structure.

The property owner must sign a statement to the effect that he has read and agrees to the scope of work that includes the following:
A. The arrangement for the disconnection of all utilities.
B. The capping of sewer or septic lines.
C. The complete demolition and/or removal of all remaining structures and piles of debris including all foundations.

D. The proper disposal of all debris at SCDHEC-permitted solid waste processing and disposal facilities.
E. The removal of all rank vegetation and the cutting of grass and weeds.
F. The saving of and protection from damage during demolition and removal, all significant trees (twenty [20] inch or greater DBH pine trees, eight [8] inch or greater DBH all other species) per the Tree Protection regulations as prescribed in this Ordinance.
G. The grading of the lot as necessary to prevent low areas and to promote proper drainage.
H. The acquisition of applicable SC-DOT transport permits.

4:6.1-1 Permit Certification

Upon documentation and site inspection that all applicable items have been addressed and completed, the moving permit shall be signed by the Building Official and issued to the applicant.

4:6.2 Moving Permit Application for Manufactured Housing

A manufactured housing moving permit shall be obtained prior to the movement of any manufactured home not purchased off a dealer's lot. Moving permits for manufactured housing entering Kershaw County must be obtained from the county from which the home is being moved. The application for a permit to move a manufactured home shall be made on a form provided by the Planning and Zoning Department. The applicant may be the manufactured home owner or the SCDOT-authorized mover. If the applicant is not the manufactured home owner, a notarized statement, signed by the manufactured home owner, must be submitted stating that the applicant has the owner's permission to move the manufactured home. If the manufactured home is not listed in the current owner's name, proof of ownership must be provided in the form of a title, bill of sale, or affidavit of repossession. In order to acquire a permit to move a manufactured home, the following requirements shall be met:

A. All applicable taxes shall be paid prior to issuance of the moving permit.
B. A copy of the SCDOT transport permit shall be submitted.
C. An application for manufactured home license and registration as required in the Manufactured Housing Installation, License, and Registration section of this Article must be issued prior to the issuance of the manufactured home moving permit if the home is to be relocated within Kershaw County.
D. Any additional information as may be required by the Planning Official shall be submitted.
E. If manufactured home is currently set up in Kershaw County, the homeowner must sign a statement to the effect that he has read and agrees to the scope of work that includes the following:
    1. The arrangement for the disconnection of all utilities.
    2. The capping of sewer or septic lines.
    3. The complete demolition and/or removal of all remaining structures and piles of debris including all foundations and underpinning.
    4. The proper disposal of all debris at SCDHEC-permitted solid waste processing and disposal facilities.
    5. The removal of all rank vegetation and the cutting of grass and weeds.
    6. The saving and protection from damage during demolition and removal of all significant trees (twenty [20] inch or greater DBH pine trees, eight [8] inch or greater DBH all other species) per the Tree Protection regulations as prescribed in this Ordinance.

7. The grading of the lot as necessary to prevent low areas and to promote proper drainage.

The above regulations may be modified if another manufactured home is to be immediately placed on the existing foundation.

4:7 FEES

A fee schedule shall be established by County Council to cover the cost of permit review and inspections for compliance with the provisions of this section, and kept on file in the Kershaw County Planning and Zoning Department. The fee schedule may be amended from time to time to reflect the changing costs of permit review and inspections.

ARTICLE 5 LAND DEVELOPMENT REGULATIONS

5:1 REGULATIONS FOR THE SUBDIVISION OF LAND AND THE CREATION OF LOTS

5:1.1 Definition of Subdivision, SC Code of Laws 6-29-1110

According to SC Code of Laws 6-29-1110, the term s*ubdivision* means all divisions of a tract or parcel of land into two or more lots, building sites or other divisions for the purpose, whether immediate or future, of sale, lease, or building development, and includes all division of land involving a new street or change in existing streets, and includes re-subdivision which would involve the further division or relocation of lot lines of any lot or lots within a subdivision previously made and approved or recorded according to law; or, the alteration of any streets or the establishment of any new streets within any subdivision previously made and approved or recorded according to law, and includes combinations of lots of record.

5:1.1-1 Exemptions (under SC Code of Laws 6-29-1110)

The following are exempt from the definition of a subdivision and, as such, are not governed by the regulations for subdivisions of this Ordinance; however, exempt subdivisions are subject to applicable zoning district regulations. These exceptions are included within this definition only for the purpose of requiring that the Planning and Zoning Department be informed and have a record of the subdivisions:

A. The combination or recombination of portions of previously platted lots where the total number of lots is not increased and the resultant lots are equal to the standards of this Ordinance and other applicable regulations.
B. The division of land into parcels of five acres or more where no new street is involved. Plats of these exceptions must be received as information by the Planning and Zoning Department, which shall indicate that fact on the plats.
C. The combination or recombination of entire lots of record where no new street or change in existing streets is involved.

5:1.1-2 Kershaw County Exemptions

The following exemptions from the definition of a subdivision are hereby established by Kershaw County and are included within this definition only for the purpose of requiring that the Planning and Zoning Department be informed and have a record of the subdivisions:

A. The division of land to create a cemetery lot.
B. The division of land by will or inheritance under the statute of descent and distribution as long as no new street is involved.
C. The division of land by gift conveyed by deed as long as no new street is involved. Such exemption shall be limited to the conveyance of land from one member to another member of the same immediate family i.e. (husband, wife, mother, father, children, grandchildren, brothers, sisters). Land so divided may not be further transferred by sale or gift to any party other than a member of the same immediate family for a period of eighteen (18) months from the date the plat is approved for recording and shall be so notated on the plat. The Planning Official may waive the eighteen (18) month waiting period if the property owner can establish legitimate and compelling cause. The eighteen (18) month waiting period shall also be waived in the event of a judicial foreclosure.

5:1.2 Lots

Lots include existing lots of record and lots created by the subdivision of a tract or parcel of land. The word *lot* includes the words *parcel, plot, property,* and *tract*.

5:1.2-1 Applicability

As of the effective date of this Ordinance, the following regulations apply to the creation of all new lots of record including lots exempt for the definition of subdivision.

5:1.2-2 Definitions

Street - Except as provided by these regulations, a street is any publicly or privately maintained thoroughfare (street, road, drive, avenue, circle, way, lane, boulevard, etc.) or space which has been dedicated, deeded, designed, or used for vehicular traffic that provides access to more than three (3) parcels of land. Access within multiple parcel group developments is excluded from this definition. The words street and road shall be used interchangeably in this section.

A. For family exemptions pertaining to the division of land (parcel) by gift conveyed by deed conveying land from one member to another member of the same immediate family (husband, wife, mother, father, children, grandchildren, brothers, sisters) in which access (the access) will be provided by an unimproved private street/drive, the family exemption will be limited to the division of land hereunder into no more than ten (10) lots from the original parcel.

   The Planning Official may waive the street construction standards to allow the division of land under the family exemption, under the following conditions:

   1. If the existing drive must be extended to provide access to the subject parcel(s), the access shall be by a right-of-way easement under the same ownership of the subject parcel(s).
   2. The deed granting the land (parcel) and right-of-way easement must specifically stipulate substantially in this form:
      a. The easement right-of-way is subject to maintenance by the grantor and grantee and is a private drive or private right-of-way easement.
      b. Access to the parcel is not restricted.
      c. Provisions, if any, for landscaping; paving; fencing; or the planting, construction, or placement of any natural or man-made object within the easement provided access is not restricted.

Driveway - A paved or unpaved area used for ingress or egress of vehicles, and allowing access from a street to a building, lot, structure, or facility that provides access to no more than three (3) parcels of land. Access to multiple parcel group developments is excluded from the three parcel restriction.

Easement - A right-of-way granted, but not dedicated, for limited use of private land for a public or quasi-public purpose and within which the owner of the property shall not erect any permanent structures. Access easements providing vehicular access to no more than three (3) parcels of land or access easements to multiple parcel group developments shall be classified as

driveways for the purpose of this Ordinance. Access easements providing vehicular access to more than three (3) parcels of land shall be classified as streets for the purpose of this Ordinance.

Lot - A parcel of land considered as a unit. The terms *lot, property, plot, parcel*, or *tract* whenever used in this Ordinance, are interchangeable.

Lot of Record - A lot that is recorded by plat or deed with the Kershaw County Register of Deeds.

5:1.2-3 Accessibility

Notwithstanding the exemptions from the definition of a subdivision, no lot may be created without vehicular and pedestrian access. Unless specifically allowed by these regulations, all lots must have direct access to a publicly dedicated street or an approved private street as provided for in this Ordinance. All publicly dedicated and approved private streets must be constructed to the Kershaw County street standards of this Article.

5:1.2-4 Dimensions

Not withstanding the exemptions from the definition of a subdivision, all lots shall meet the minimum lot area, yard, setback, height, density, floor area, and impervious surface requirements of the zoning district regulations in which they are located.

5:1.2-5 Design

The lot size, width, depth, shape, grade, and orientation shall be in proper relation to street and block design, to existing and proposed topographical conditions, and for the type of development and use contemplated. Unless specifically allowed by these regulations, all lots shall have street frontage no less than the minimum width requirements of the zoning district regulations in which they are located, except for lots located on cul-de-sacs or curves less than ninety (90) degrees. All lots shall have a configuration so that the depth of the lot shall not exceed the frontage of the lot by a ratio greater than six (6) to one (1) (6 depth/1 frontage). The frontage of the lot shall be determined by the frontage that abuts a public or approved private street. Consideration for irregularly shaped lots may be given to overcome unusual topographic conditions in new subdivisions and to allow for subdivision of existing irregularly shaped lots of record provided that zoning dimensional requirements can be met.

5:1.2-6 Flag Lots and Access Easements

The Planning Official shall approve a flag lot only upon a determination that it:

A. Will not be detrimental to public health, safety, or general welfare;
B. will not adversely affect the reasonable development of adjacent property;
C. is justified because of topographic or other special conditions unique to the property involved, in distinction to mere inconvenience or financial disadvantage;
D. is consistent with the objectives of this Ordinance;
E. will not have the effect of nullifying the intent or purpose of this Ordinance or the Comprehensive Plan; and
F. will not conflict with applicable requirements of the zoning district regulations.

Access easements shall not be permitted in new subdivisions.

5:1.2-7 Conditions for Allowing Flag Lots and Access Easements

The creation of flag lots or access easements shall not be allowed except under the following conditions:

A. To permit full use of a lot of record (existing lot) created and existing prior to the adoption of this Ordinance that does not meet the minimum street frontage requirements of the zoning district in which the lot is located. When meeting the above, as determined by the Planning

Official, flag lots may be created and access easements may be permitted in accordance with the following development standards:

1. The other lot of record meets all zoning requirements specified for the respective zone in which it is located, both before and after the subdivision to create the access easement or flag lot.
2. The "flag" section of an existing flag lot or an existing lot accessed by the access easement shall meet or exceed the requirements other than the minimum street frontage specified for the respective zone. The area of the access driveway of the flag lot or access easement shall not be included in computing minimum lot area requirements. Title to the access driveway must be conveyed by general warranty deed in the same manner as title to the "flag" portion of the lot, or in the case of an easement, recorded with the deed to the accessed lot.
3. The driveway section of the flag lot or access easement shall be not less than 30 feet wide. Flag lot access driveways shall be separated from other driveways by the required minimum lot width for the zoning district in which the flag lot is to be created, measured from the front property line unless shared driveways are provided.
4. Once subdivided to include a flag lot or access easement, the other lot of record shall not be further subdivided for a period of twelve (12) months after the creation and recording of the flag lot.
5. Flag lots created under this section may not be further subdivided.

B. Creation of flag lots to overcome unusual natural or topographic conditions in new subdivisions. Flag lots may be created in new subdivisions where natural or topographic conditions create access problems, provided:

1. Access driveways shall be not less than thirty (30) feet wide, and shall front for at least thirty (30) feet on a public street.
2. Flag lot access driveways shall be separated from other driveways by the required minimum lot width for the zoning district in which the flag lot is to be created, measured from the front property line unless shared drives are provided as per below.
3. Use of flag lot driveways by adjoining lots on either side of the driveway is encouraged as a means of limiting curb cuts, but a flag lot driveway shall not be used to access a second flag lot.
4. The area of an access driveway shall not be counted when computing the minimum area of a lot as required by the zoning district regulations of this Ordinance.
5. Flag lots shall access public streets or approved private streets constructed to Kershaw County engineering specifications.
6. Flag lots created under this section may not be further subdivided.

C. Creation of a flag lot or an access easement to access lots created under the definition of exempt subdivisions. The Planning Official shall approve a flag lot or an access easement in exempt subdivisions only upon a determination that it:

1. Will not be detrimental to public health, safety, or general welfare;
2. will not adversely affect the reasonable development of adjacent property;
3. is consistent with the objectives of this Ordinance and will not have the effect of nullifying the intent or purpose of this Ordinance or the Comprehensive Plan; and;
4. will not conflict with applicable requirements of the zoning district regulations.
5. The area of an access driveway shall not be counted when computing the minimum area of a lot as required by zoning district regulations.

6. Access driveways shall be not less than thirty (30) feet wide, and shall front for at least thirty (30) feet on a public street or previously recorded private street.
7. Flag lot access driveways shall be separated from other driveways by the required minimum lot width for the zoning district in which the flag lot is to be created, measured from the front property line unless shared driveways are provided as per below.
8. Use of access driveways by adjoining lots on either side of the driveway is encouraged as a means of limiting curb cuts, but a flag lot driveway shall not be used to access a second flag lot.

5:1.2-8 Appeal to Planning and Zoning Commission

The decision of the Planning Official concerning flag lots or access easements may be appealed to the Planning and Zoning Commission. The appeal must be filed within sixty (60) days after actual notice of the administrative decision, and shall be heard at the next regular Planning and Zoning Commission meeting scheduled at least fifteen (15) days after the appeal is filed.

5:1.2-9 Subdivision of Lots, Parcels, and Tracts on Existing County Unimproved (Dirt) Roads

Existing lots, parcels, and tracts of record (recorded with the Register of Deeds) fronting on an unimproved (dirt) County-maintained road that does not meet the Kershaw County dirt road engineering specifications may nonetheless be subdivided; provided no more than three (3) additional lots shall be created from each existing lot, parcel, or tract. The lots created on the dirt road that does not meet the dirt road standards as set forth in the engineering specifications including the lot, parcel, or tract from which the lots were created, shall not again be subdivided unless and until the dirt road on which the lots front is improved to Kershaw County dirt road standards or an approved private road alternate design.

5:1.2-10 Residential Major Subdivision Reverse Frontage Lots

Residential major subdivisions, where proposed for areas adjacent to arterial streets and roads, shall be denied direct access to and shall be separated from such streets and roads by reverse frontage lots. Elsewhere, double frontage lots shall be prohibited.

Residential reverse frontage lots shall have a minimum rear yard of fifty (50) feet next to the arterial street, measured from the shortest distance of the proposed back building line to the street right-of-way and shall within such rear yard, and immediately adjacent to the right-of-way, have a non-access planting screen easement of at least thirty (30) feet in depth planted to Type “D” Buffer requirements per this Ordinance.

5:1.2-11 Alignment

Side lot lines shall be aligned at approximately right angles to straight street lines and radial to curved street lines.

5:1.2-12 Subdivision of Lots Requiring a Water Quality Buffer

Where a subdivision of a parcel is proposed in which a water quality buffer plat is required per the provisions of this Article, the water quality buffer plat must be prepared and approved for the entire parcel prior to approval of the subdivision.

5:1.3 Areas Subject to Flooding

5:1.3-1 General

If the area being developed, or any part thereof, is located within the boundary of a designated floodplain as delineated on Federal Emergency Management Agency (FEMA) Maps for Kershaw County, adequate plans and specifications for protection from flooding shall be provided as required by the Kershaw County Flood Damage Prevention Ordinance.

5:1.3-2 Plat of Flood Hazard Areas

Any plat which contains land subject to flooding shall be accompanied by evidence that no appreciable expansion of the area subject to flooding would result from the proposed land development, and that the proposed development will be adequately protected from inundation without appreciable interference with the flow of any watercourse or into an impounding basin.

All such evidence including surveys and specifications shall be submitted with the final plat, and no final plat shall be approved in the absence thereof.

5:1.3-3 Prevention of Expansion of Flood Hazard Areas

In no case shall any fill, levee, or other protective works be approved unless sufficient compensating adjustments of waterways, ditches, or impounding basins are made to prevent any appreciable expansion of flood hazard areas.

The county will not accept any street built below the 100-year flood elevation.

5:1.4 Water Supply

5:1.4-1 SCDHEC Approval Required

All developments and subdivisions shall be provided with water supplies and systems conforming to the requirements, rules, and policies of the South Carolina Department of Health and Environmental Control (SCDHEC), and approved by said agency.

5:1.4-2 When Required to Connect to Community Water Supply System

Subdivisions shall be required to connect to a public water supply system if public service is reasonably available within the following distances:

Table 5-1 COMMUNITY WATER SUPPLY SYSTEM CONNECTION REQUIREMENTS

Size of Subdivision	Distance
2 lots	400 feet
3-10 lots	1,000 feet
11 or more lots	2,000 feet

5:1.4-3 System Requirements

The internal water supply system of the subdivision at build-out shall be adequate to handle domestic demand including fire flow, provided that the existing infrastructure of the available

public water system supplying water to the entrance of the subdivision is capable of sustaining fire flow.

5:1.4-4 System Approval Required

Improvement plans and specifications for all water supply systems for which the developer is responsible shall be submitted for approval with the preliminary plan.

5:1.4-5 System to Include Fire Hydrants

Where existing infrastructure of the available public water system supplying water to the entrance of the subdivision is capable of sustaining fire flow, fire hydrants will be installed internally by the developer. Fire hydrants shall be installed and spaced internally throughout each subdivision to maintain a maximum space of 500 feet apart based on fire truck (fire apparatus) access.

5:1.5 Sanitary Sewer Facilities

5:1.5-1 SCDHEC Approval Required

All land developments and lots within subdivisions shall be provided with sanitary sewerage facilities conforming to requirements, rules, and policies of the South Carolina Department of Health and Environmental Control (SCDHEC), and approved by said agency. Said facilities shall be "stubbed out" prior to road surfacing.

5:1.5-2 When Required to Connect to Public Community Sewerage System

Subdivisions shall be connected to a public sanitary sewer system if public service is available within the following parameters:

Table 5-2 COMMUNITY SEWERAGE SYSTEM CONNECTION REQUIREMENTS

Size of Subdivision	Applicable System Type	Distance *
10-29 lots	Gravity Flow	500 feet
30 or more lots	Gravity Flow Forced Main	750 feet 750 feet

***** The Planning and Zoning Commission may issue a variance to this requirement based on extremely unusual engineering/construction requirements.

If a public system is not in place or cannot be reasonably extended, the developer must assure there will be in place individual subsurface disposal systems where appropriate, given site density, soil, slope, and other conditions, and subject to applicable SCDHEC regulations.

5:1.5-3 System Requirements

The sanitary sewer system shall be adequate to handle the necessary flow based on complete development.

5:1.5-4 System Approval Required

Improvement plans and specifications for all disposal systems for which the developer is responsible shall be submitted for approval with the preliminary plan.

5:1.5-5 Kershaw County Requirements for Community Onsite Sewage Treatment and Disposal Systems

A. The system must obtain a Permit to Construct and an Approval to Place in Operation from SCDHEC.
B. The system plan shall be reviewed and approved by Kershaw County Planning and Zoning and Kershaw County Engineering. Kershaw County may impose conditions in addition to SCDHEC permit conditions based upon its professional engineering assessments.
C. The project owners, a homeowners' association, or other responsible party shall enforce covenants and restrictions as to the maximum number of lots, maximum number of bedrooms per dwelling unit, maintenance and inspection agreements, and other conditions of approval of the community onsite sewage treatment and disposal systems imposed by SCDHEC and Kershaw County.

5:1.6 Street Lighting

Street lighting shall be required in all major residential subdivisions. Street lighting shall be properly shielded so as not to create a hazard to drivers or a nuisance to residents. The residential lighting plans shall demonstrate that the proposed street lighting is adequate to provide for safe motorist, cyclist, and pedestrian street usage. Light spacing shall take into consideration the diameter and intensity of the light projection, lot size, road curves, hills, and other visibility restrictions. Flood lighting shall not be allowed for street light fixtures. Lighting must be provided for dead-end alleys.

5:1.7 New Subdivision and Land Development Names

The Planning and Zoning Commission requires that new subdivision and development names shall be subject to the approval of the Kershaw County 911 Addressing and shall not duplicate the name of any recorded subdivision or development.

5:1.8 Utility Easements and Rights-of-Way

A. **Utility Easements** - Adequate areas of suitable size and location shall be allocated for utility easements. The location and size of such easements shall be coordinated with the public and private utilities involved.

   Where provided along side or rear lot lines, utility easements shall be not less than twenty (20) feet in width. No vegetative screening or fencing required by the buffering, screening, open space, and landscaping regulations of this Ordinance shall be planted or installed inside utility and drainage easements, excluding overhead easements, without the consent of the Planning Official and the easement holder. If plantings or fences inside utility or drainage easement areas are allowed, these plantings and fences shall be maintained in accordance with the terms of consent and any applicable maintenance provisions of this section. Any tree planted within the right-of-way of overhead utility lines shall be a small-maturing tree of a mature height of no greater than fifteen (15) feet.
B. **Kershaw County Sewer Easements and Rights-of Way**
   1. **Dedication of Right-of-Way** - The developer may dedicate sewer line rights-of-way to Kershaw County. The proposed locations of Kershaw County public sewer rights-of-way

shall be approved by the Kershaw County Utility Director. Where provided along side or rear lot lines, utility easements shall be not less than twenty (20) feet in width. The sewer line right-of-way shall be shown on the construction plans, as built plans, and on the final plat. The sewer line and right-of-way shall be dedicated to Kershaw County through the Certification of Ownership and Dedication per the final plat submittal requirements of this Article and is repeated herein:

a. **Certificate of Ownership and Dedication**

It is hereby certified that I am (we are) the owner(s) of the property shown and described hereon and that I (we) hereby dedicate said streets; walks; parks; rights-of-way; sewer lines to include manholes and manhole castings, fittings and other components, and service lines to the right-of-way boundaries; and other sites to public use as specifically noted hereon. It being understood that I (we) hereby warrant said facilities and agree to bear any costs associated with correcting any defects in said facilities for a period of one (1) year from the date of final plat approval.

_____ _____

Date Owner

_____ _____

Date Owner

b. **Use of Right-of-Way** - The right-of-way shall be for the exclusive use of Kershaw County. No vegetative screening or fencing required by the buffering, screening, open space, and landscaping regulations of this Ordinance shall be planted or installed inside the Kershaw County public sewer right-of-way without the consent of the Planning Official and the Utilities Director. The Planning and Zoning Commission or Planning Official, as applicable, may approve the installation of sidewalks, trails, and greenways as required in this Article within the Kershaw County public sewer rights-of-way. All proposed sidewalks, trails, and greenways including any proposed hardscaping shall have approval from the Utilities Director prior to sketch plan or site plan submittal to the Planning Official or Planning and Zoning Commission, as applicable. However, the County reserves the right to dig up, remove, or destroy any buildings, fences, sidewalks, driveways, entranceways, and other structures allowed within the right-of-way for the purpose of maintaining, inspecting, and operating the sewer facilities. The County shall, in connection with such action, take reasonable precaution not to damage or move said structures, but shall not he held liable for damages.

2. **Sewer Line Easements** - The developer (grantor) may grant sewer line easements to Kershaw County. Where provided along side or rear lot lines, utility easements shall be not less than twenty (20) feet in width. Ownership of the easement shall remain with the property holder. However, no construction within the sewer easement, including buildings, fences, sidewalks, driveways, entranceways, and other structures shall be allowed within the boundaries of the easement without prior approval of the Utilities Director.

The sewer facilities installed within the easement shall remain the property of Kershaw County. The County shall have the right to maintain, inspect, rebuild, remove, repair, improve, and relocate within the easement, and to make such changes, alterations, substitutions, additions to or extensions of its facilities, including the right to increase the

size and number of pipes and manholes. However, the County shall, in connection with such action, take reasonable precaution not to damage or move the facilities of the easement grantor.

All rights reserved to the grantor of the easement shall be subject at all times to the paramount right of the County to dig up, remove, or destroy any buildings, fences, sidewalks, driveways, entranceways, and other structures belonging to the grantor for the purpose of maintaining, inspecting, and operating the sewer facilities. Any shrubbery, fence, or other structure placed in the sewer easement shall be done at the risk of the property owner and the County shall not be held responsible for damages done to any structure, shrubbery, or fence resulting from the utility having to make excavations or openings in the utility easement.

In addition to the grant of easement, the grantors shall grant to the County during the period of construction and during any subsequent period in which maintenance, inspection, repairs, or reconstruction of the sewer system may be necessary, the right of using land abutting the easement as may be necessary for the placement of materials excavated from the easement and to bring in lines and equipment. The County shall restore damages resulting from said uses of land abutting the easement.

a. **Sewer Easement Certification** - The following certification, as applicable, shall be included on all construction plans and final plats submitted for approval:

The Party of the First Part, hereinafter called "Grantor," does hereby grant, bargain, sell, release and convey unto Kershaw County, hereinafter called "Grantee," its successors and assigns, sewer lines and appurtenances incidental thereto including but not limited to pipes, manholes and fittings and other components comprising the sewer system as shown on hereon, in fee simple, together with an exclusive easement, twenty (20) feet in width together with the right during the course of operation, construction, and/or maintenance to use such additional width as may be necessary on either side of the aforesaid right-of-way herein granted, for the purpose of operation, construction, and/or maintenance of said sewer lines and appurtenances through and under the lands hereon described, together with the right of ingress and egress across said property at all times, and the right to excavate and refill ditches and/or trenches, and the further right to remove trees, bushes, undergrowth, crops and/or other obstructions interfering with the operation, construction and/or maintenance of said sewer lines and appurtenances. The grantor hereby agrees that no construction (including, but not limited to, buildings, paving, pipe lines or other utilities) will be allowed within the limits of this easement without the prior approval of Kershaw County.

_____ Date _____Owner (Grantor)

_____ Date _____Owner (Grantor)

Storm Drainage Pipe Easements- Storm drainage pipe easements shall provide adequate area for maintenance equipment to operate. Some typical easements are listed below:

Table 5-3 DRAINAGE EASEMENT WIDTH PER PIPE SIZE AND DEPTH		
Maximum Pipe Size	**Maximum Depth to Invert**	**Width of Easement**
18”	3.5’	20’
24”	5.0’	24’
36”	6.0’	30’
54”	7.0’	36’

D. **Stormwater Open Channels Easements** - The minimum easement width for an open channel/ditch is twenty-four (24) feet. For channels in excess of four (4) feet in width and/or four (4) feet in depth, the easement width shall be increased by two (2) feet for each additional foot of width and/or depth or width of the channel plus twenty (20) feet, whichever is wider.

E. **Detention Pond Easements** - An access easement of twenty (20) feet minimum shall be provided to the pond access gate. The entire pond and sufficient access on the top of the circumference of the pond shall be included as part of the drainage easement.

5:1.8-1 Maintenance of Easements and Rights-of-Way

A. **Maintenance of Easements** - Easements shall be maintained by the property owner(s) and may be used to satisfy yard requirements unless specifically accepted for public maintenance by the County or utility with lines in such easement.

   Covenant restrictions placed in the deed of a lot which contains a utility easement shall stipulate that the County, municipal, or other utility provider with lines in such easement shall have full right of access.

B. **Maintenance of Kershaw County Sewer Rights-of-Way -** Public sewer rights-of-way dedicated to Kershaw County shall be maintained by Kershaw County.

C. **Maintenance of Sewer Easements Granted to Kershaw County -** The easement grantor shall grant to Kershaw County the right of maintenance of the easement and sewer facilities as stated above.

5:1.9 Surveys and Markings

All land developments within the jurisdiction of this Ordinance shall be surveyed, platted, and marked in accord with the *Minimum Standards Manual for the Practice of Land Surveying in South Carolina*, as promulgated by the Code of Laws of South Carolina, 1976, Title 40, Chapter 21. This manual is hereby adopted by reference and is as much a part of this Ordinance as if contained herein.

RESERVED

RESERVED

RESERVED

RESERVED

RESERVED

RESERVED

RESERVED

RESERVED

RESERVED

RESERVED

RESERVED

RESERVED

5:2 LAND DEVELOPMENT SUBMITTAL REQUIREMENTS AND APPROVAL PROCESS

5:2.1 General Application Process

5:2.1-1 Purpose

The purpose of this section is to establish the procedure for processing land development applications.

5:2.1-2 Application Process

The application process consists of the pre-application conference, application, review, and approval.

A. **Pre-Application Conference and Sketch Plan Review** - For the purpose of securing advice in the formative stages of development design, expediting applications, and reducing development costs, the developer may request a pre-application conference and/or sketch plan review in accordance with the following requirements:
   1. **Pre-Application Conference** - At the request of the applicant, the County Planning Official shall arrange a pre-application conference to discuss requirements of this Ordinance, land development practices, proposed plans of the applicant, applicable provisions of the Comprehensive Plan, and related matters. The Planning Official shall invite all affected or interested agencies.
   2. **Sketch Plan Review**- In addition, or as an alternative to the pre-application conference, the applicant may request an informal review of a sketch plan for the proposed subdivision or development. Applications for a major subdivision require a formal sketch plan for Planning and Zoning Commission review and approval. Similarly, applications for a planned development district (PDD) require a formal PDD site plan for Planning and Zoning Commission review and approval.

B. **Applications** - Applications will be assigned to one (1) of the following seven categories, as determined by the Planning Official, and processed accordingly:
   1. Exempt subdivision.
   2. Minor subdivision.
   3. Major subdivision.
   4. Large acreage residential developments on private roads.
   5. Minor group development.
   6. Major group development.
   7. Planned development district.

C. **Review** - The designated responsibility for reviewing and approving each of the above is as follows:

Table 5-4 LAND DEVELOPMENT REVIEW AND APPROVAL RESPONSIBILITIES

Development Type	Planning Official	County Engineer	Building Official	Planning Commission	County Council
Exempt Subdivision	✓				
Minor Subdivision	✓				
Major Subdivision	✓	✓		✓	
Large Acreage	✓	✓			
Minor Group Development	✓	✓	✓		
Major Group Development	✓	✓	✓	✓	
Planned Development District	✓	✓		✓	✓

Note: Subdivisions or group developments may be developed under the conservation subdivision and group development design provisions of this Ordinance. All respective land development submittal requirements are applicable to conservation design projects.

5:2.2 Exempt Subdivisions

The following are exempt from the definition of a subdivision and, as such, are not governed by the regulations for subdivisions of this Ordinance. Exempt subdivisions, however, are subject to applicable zoning district regulations.

5:2.2-1 State Law Exemptions (under SC Code of Law 6-29-1110)

The following exceptions are included within this definition only for the purpose of requiring that the Planning and Zoning Department be informed and have a record of the subdivisions:

A. The combination or re-combination of portions of previously platted lots where the total number of lots is not increased and the resultant lots are equal to the standards of this Ordinance and other applicable regulations.
B. The division of land into parcels of five acres or more where no new street is involved. Plats of these exceptions must be received as information by the Planning and Zoning Department, which shall indicate that fact on the plats.
C. The combination or recombination of entire lots of record where no new street or change in existing streets is involved.

5:2.2-2 Kershaw County Exemptions

The following exemptions are hereby established by Kershaw County and are included within this definition only for the purpose of requiring that the Planning and Zoning Department be informed and have a record of the subdivisions:

A. The division of land to create a cemetery lot.
B. The division of land by will or inheritance under the statute of descent and distribution as long as no new street is involved.
C. The division of land by gift conveyed by deed as long as no new street is involved. Such exemption shall be limited to the conveyance of land from one (1) member to another member of the same immediate family i.e. (husband, wife, mother, father, children, grandchildren, brothers, sisters). Land so divided may not be further transferred by sale or gift to any party other than a member of the same immediate family for a period of eighteen (18) months from the date the plat is approved for recording and shall be so notated on the plat. The Planning Official may waive the eighteen (18) month waiting period if the property owner can establish legitimate and compelling cause. The eighteen (18) month waiting period shall also be waived in the event of a judicial foreclosure.
D. A parcel of land that is proposed to be used as the site for a utility substation, power line easement or right-of-way, pumping station, pressure regulating station, electricity regulating station, gas pressure control station, or similar facility.

5:2.2-3 Submittal Requirements

A. Applicants of subdivisions exempt from the land development requirements of this Ordinance shall nonetheless submit to the Planning Official original copies (with original Registered Land Surveyor stamp or seal) of said exempt plat, drawn to the requirements of the *Minimum Standards Manual for the Practice of Land Surveying in South Carolina*, and shall include the Kershaw County Tax Map Survey (TMS) number. The exempted subdivision shall, however, conform to applicable zoning district regulations of this Ordinance.

B. The Planning Official shall prepare approval guidelines and a checklist to assist the applicant in preparing the plat and submitting the documentation required to obtain approval for recording.
C. The applicant shall produce evidence that no taxes or assessments are outstanding against the property.
D. The applicant shall pay the proscribed plat approval fee set by County Council.

5:2.2-4 Approval Process

A. The Planning Official shall make a determination that the proposed subdivision qualifies for and meets the requirements of an exempt subdivision. Supporting documentation such as deeds, wills, titles, supplemental plats and maps, etc. shall be reviewed and evaluated. The Planning Official shall prepare a plat approval guideline and checklist.
B. Within ten (10) working days of submission of the plat, the Planning Official shall make a determination that the proposed exempt subdivision conforms to applicable zoning district regulations of this Ordinance and shall approve, approve with changes, or reject the plat. If rejected, changes, additional analysis, or other information necessary to make an approval determination shall be identified and transmitted to the applicant.
C. Upon determination that all conditions for approval have been met, the Planning Official shall sign and stamp the plat as approved for recording.

5:2.3 Minor Subdivisions

5:2.3-1 Definition of Minor Subdivision

A minor subdivision is a subdivision which does not involve any of the following:
A. The creation of more than ten (10) lots.
B. The creation of any new street.
C. The extension of public water or sewer lines.
D. The installation of drainage improvements through one (1) or more lots to serve one (1) or more other lots.
E. The extension of an existing minor or major subdivision or development under the same ownership or control which would in effect create more than ten contiguous lots.
F. The creation of lots that cannot meet the driveway maximum number and separation standards.

5:2.3-2 Submittal Requirements

A. Applicants requesting approval of a proposed minor subdivision, as defined by this Ordinance, shall submit to the Planning Official original copies (with original Registered Land Surveyor stamp or seal) of a plat displaying the Kershaw County Tax Map Survey (TMS) number, drawn to the requirements of the *Minimum Standards Manual for the Practice of Land Surveying in South Carolina*, the prescribed fee, and evidence that no taxes or assessments are outstanding against the property.
B. The Planning Official shall prepare approval guidelines and a checklist to assist the applicant in preparing the plat and submitting the documentation required to obtain approval for recording.

5:2.3-3 Approval Process

A. The Planning Official shall make a determination that the proposed subdivision qualifies for and meets the requirements of a minor subdivision. Supporting documentation such as deeds, wills, titles, supplemental plats and maps, etc. as outlined in the checklist and approval guidelines shall be reviewed and evaluated.
B. Within ten (10) working days of submission of the plat, the Planning Official shall make a determination that the proposed minor subdivision conforms to applicable zoning district regulations and the regulations for the subdivision of land and the creation of lots section of this Ordinance and shall approve, approve with changes, or reject the plat. If rejected, changes, additional analysis, or other information necessary to make an approval determination shall be identified and transmitted to the applicant.
C. Upon determination that all conditions for approval have been met, the Planning Official shall sign and stamp the plat as approved for recording.

5:2.4 Major Subdivisions

5:2.4-1 Definition of Major Subdivision

A major subdivision is any subdivision other than an exempt subdivision or one which does not qualify as a minor subdivision, a large acreage residential development, or a planned development district.

5:2.4-2 Sketch Plan Review

A. **Submittal Requirements**
An application for a major subdivision shall be submitted on forms prepared by the Planning Official. Sketch plans shall be prepared for all major subdivisions.
B. **Sketch Plan** - Sketch plans shall be prepared in accordance with the regulations for the subdivision of land and the creation of lots and with the design standards and required improvements of this Article. All sketch plan information must be displayed on a single sheet of paper and shall contain the following:
   1. **Sketch Plan General Information**
      a. Proposed name of land development (subdivision), which shall not duplicate or approximate the name of any other development in the County, or name of property if no name is chosen (this is commonly the name which the property is known locally).
      b. Name and address, including the telephone number of the developer/applicant and/or owner/applicant, and licensed contractor.
      c. North arrow, scale, and date, including revision dates.
      d. Tract boundaries and acreage.
      e. Tax Map Survey Number(s).
      f. Vicinity map.
      g. Date.
   2. **Site Information**
      a. The location of topographical lines (closest available contour intervals - USGS contours acceptable), floodplain areas, wetlands, and storm drainage ditches.
      b. Location, names, and right-of-way widths of existing or platted streets within and in the vicinity of tract.

c. Location and dimensions of all existing rights-of-way and easements either on or adjacent to the property to be subdivided. Specifics must be given as to whether utilities are located within the easements or rights-of-way, and the location of poles and/or towers must be shown.
d. Size and location of existing sewers, water mains, drains, culverts, or other underground facilities within the street or within the right-of-way of streets or roads adjoining the tract.
e. Political lines, if applicable, and the position of the proposed development in relation to its surroundings indicating current land use and zoning of the subject site and adjacent property.

3. **Planned Improvements**
   a. Approximate location and layout of proposed streets, roads, and sidewalks.
   b. Approximate locations, dimensions, and area of all proposed lots.
   c. Layout of all existing lots, including building setback lines, scaled dimensions of lots, and lot numbers.
   d. Total number of lots (existing and/or proposed).
   e. Layout of proposed easements, indicating width and use.
   f. A general representation of the extent of proposed grading throughout the site, indicating the change in natural site contours. This does not require a staking plan.
   g. The location, dimensions, and acreage of all common open space property proposed to be set aside for the common use of property owners in the proposed subdivision with designation of the purpose thereof and conditions, if any, of the dedication or reservation. Refer to the Residential Common Open Space section of Article 3 of this Ordinance.
4. **Phased Development**

   The applicant may, and is encouraged to submit a sketch plan of the entire track ultimately to be developed, although the present plans may only call for development of part of the development of part of the property.

C. **Sketch Plan Approval Process**
1. The applicant shall submit to the Planning Official ten (10) copies of the sketch plan drawn per the requirements stipulated in this section.
2. The Planning Official shall review the sketch plan for completeness per the sketch plan submittal requirements of this section. A sketch plan deemed complete by the Planning Official will be placed on the agenda for the next regular Planning and Zoning Commission meeting scheduled at least forty-five (45) days after the sketch plan is filed. The Planning Official shall distribute copies of the sketch plan to all affected County agencies for review and comment.
3. The Planning Official shall present the application to the Planning and Zoning Commission in a staff report with the Planning and Zoning Department's analysis and recommendations and any impact assessment reports received from commenting agencies per the adequate public facilities provisions of this Article. The Planning and Zoning Commission shall consider compliance of the proposed major subdivision with the applicable subdivision regulations and design standards and required improvements per this Article, the impact on public facilities, and the goals and objectives of the Comprehensive Plan.

4. The Planning and Zoning Commission shall approve, approve conditionally, or disapprove the sketch plan. If the sketch plan is disapproved or approved conditionally, the reasons for such action shall be conveyed to the applicant. The reasons for disapproval shall refer specifically to those parts of the Comprehensive Plan, ordinance, or regulation with which the sketch plan does not conform. On conditional approval, the Planning and Zoning Commission may require the applicant to resubmit the sketch plan with all recommended changes before approving said sketch plan. The Planning and Zoning Commission may direct the Planning Official to review the resubmitted sketch plan and to make a determination of approval, or it may require that the resubmitted sketch plan be brought before the Planning and Zoning Commission for review at the next regular Planning and Zoning Commission meeting scheduled at least one (1) calendar month after the resubmitted sketch plan is filed.
5. If the sketch plan is found to conform to all requirements of the Ordinance, approval subject to the traffic management plan provisions of this Ordinance shall be given by the Planning and Zoning Commission or Planning Official as directed by the Planning and Zoning Commission.

5:2.4-3 Preliminary Plans

Upon final approval of the sketch plan and traffic management plan, if and as required, the applicant shall submit to the Planning Official six (6) copies of the preliminary plat and three (3) copies of construction plans and design calculations. The preliminary plans submittal shall be in compliance with the sketch plan as approved by the Planning and Zoning Commission and shall incorporate the subdivision regulations and design standards and required improvements of this Article.

A. **General Submittal Requirements**
   1. Plans sheets shall be of a convenient scale of not less than one (1) inch equals 100 feet, adjustable depending upon lot sizes and total acreage.
   2. Plan sheets should be of standard size of not greater than 24”x36” and no smaller than 24”x18”.
   3. The number of items presented on any one (1) sheet should be limited such that each item is clearly defined and easily reviewed.
   4. Sheets overcrowded with too much information such that they are difficult and/or confusing to review shall be avoided.
   5. A line and object legend shall be located within the plans.

B. **Submittal and Distribution**

   Preliminary plans shall consist of two (2) submittals: The preliminary plat and the construction plans.
   1. The applicant shall submit six (6) copies of the preliminary plat and three (3) copies of the construction plans to the Planning and Zoning Department.
   2. The Planning Official will route one (1) copy of the preliminary plat and (2) copies of the construction plans to the County Engineer.
   3. The Planning Official and/or County Engineer will distribute relevant copies of the preliminary plats and/or construction plans to other affected County departments for review and comment.

C. **The Preliminary Plat**

   Preliminary plats for major subdivisions shall contain the following:

1. **General Information**
   a. Proposed name of land development (subdivision, commercial complex, etc.), which shall not duplicate or approximate the name of any other development in the County.
   b. Name, address, and telephone number(s) of the developer/applicant and/or owner/applicant.
   c. Name, address, and telephone number(s) of the professional person(s) responsible for the subdivision's design, or for the design of any public improvements, and for the surveys.
   d. North arrow, scale, and date, including revision dates.
   e. Tract boundaries and acreage.
   f. Phase boundaries and acreage.
   g. Tax Map Survey Number(s).
   h. Vicinity map.
2. **Site Information**
   a. The location of topographical lines, at two (2) foot to five (5) foot intervals (survey verified) extending at least 100 feet outside the subdivision, wetlands, floodplain areas, and storm drainage ditches.
   b. Current zoning and land use (e.g. residential, commercial, timberland, etc.) of subject site.
   c. Political lines, if applicable, and identification of all surrounding land use and zoning. Any adjoining subdivision shall be identified by name.
   d. Location, names, and right-of-way widths of existing or platted streets within and in the vicinity of tract. In case of re-subdivisions, a copy of existing plat with proposed re-subdivisions superimposed shall be submitted on a separate sheet.
   e. Location and dimensions of all existing rights-of-way and easements either on or adjacent to the property to be subdivided. Specifics must be given as to whether utilities are located within the easements or rights-of-way, and the location of poles and/or towers must be shown.
   f. Size and location of existing sewers, water mains, drains, culverts, or other underground facilities within the street or within the right-of-way of streets or roads adjoining the tract.
   g. Elevations where public water and/or public sewers are to be installed referencing the most recent vertical datum (if applicable).
3. **Planned Improvements**
   a. Layout of streets, alleys, sidewalks, paths, and/or greenways.
   b. Layout of all blocks and lots, including building setback lines, scaled dimensions of lots, consecutive lot and block numbers, and total number of lots.
   c. Layout of all easements and rights-of-way, indicating width and use.
   d. The location, dimensions, and acreage of all common open space property proposed to be set aside for the common use of property owners in the proposed subdivision with designation of the purpose thereof and conditions, if any, of the dedication or reservation. Refer to the Residential Common Open Space section of Article 3.
   e. Indication of the use of all lots (single-family, two-family, multi-family, townhouse, offices, commercial, warehousing, industrial, etc.). Proposed uses shall not be contrary to those permitted by the zoning district regulations of this Ordinance.

5:2.4-4 Construction Plans

The construction plans shall include the following if and as such improvements are applicable to the proposed development:

A. Staking plan showing proposed cut and fill, borrow areas, etc.
B. Profiles showing existing and proposed elevations along the center lines of all new roads. The elevation along the center lines of existing roads shall be shown within 100 feet of their intersection with new roads. Approximate radii of all curves, lengths of tangents, and central angles on all streets.
C. Plans and profiles showing the locations and typical cross-section of street pavements including curbs and gutters, sidewalks, storm drainage easements, rights-of-ways, manholes, catch basins, and other storm drainage structures.
D. The locations of street trees, street lighting, and street signs.
E. The location, size, invert elevations, and easements (as applicable) for sanitary sewers, potable water lines, gas lines, underground cable and electric lines, fire hydrants, and other utilities and structures; showing connection to and exact location and size of all existing water, gas, or other underground utilities or structures.
F. Copies of all applicable encroachment permits.
G. Location, size, elevation, easements, and other appropriate description of any existing facilities or utilities, including, but not limited to existing streets, sewers, drains, water mains, water bodies, streams, and other pertinent features such as swamps, railroads, and buildings at the point of connection to proposed facilities and utilities within the subdivision. The water elevations of adjoining lakes or streams at the date of the survey and the approximate 100-year flood elevations of such lakes or streams.
H. All elevations shall be referred to most recent vertical datum where public water and/or public sewers are to be installed.
I. Erosion prevention, sediment control, and stormwater drainage plans showing the acreage of each drainage area affecting the proposed subdivision, both on-site and off-site, to include, but not limited to location, size, and invert elevations of proposed stormwater drains, stormwater detention/retention pond details, and any other applicable structural and non-structural stormwater best management practices details and notes.
J. Topography at a contour interval of two (2) feet, referred to vertical datum currently required by FEMA when public water and/or public sewers are to be installed where there are portions(s) of the subdivision that would be inundated by a 100-year frequency flood.
K. All details, notes, and references required by the construction standards and specifications of Kershaw County, any other local government or organization providing any utility, and the SCDHEC.
L. A construction sequence.
M. Title, name, address, telephone, and signature of the South Carolina Registered Engineer and Surveyor responsible for the plans with plan preparation date, including revision dates.
N. When sewer utility easements are granted, or rights-of-way are dedicated to Kershaw County, the construction plans shall contain the applicable certifications:
    1. **Certification of Ownership and Dedication** - The following must be completed by the property owner:

        It is hereby certified that I am (we are) the owner(s) of the property shown and described hereon and that I (we) hereby dedicate said streets; walks; parks; rights-of-way; sewer lines to include manholes and manhole

castings, fittings and other components, and service lines to the right-of-way boundaries; and other sites to public use as specifically noted hereon. It being understood that I (we) hereby warrant said facilities and agree to bear any costs associated with correcting any defects in said facilities for a period of one (1) year from the date of final plat approval.

_____	_____
Date	Owner
_____	_____
Date	Owner

2. **Sewer Easement Certification** - The following certification, as applicable, shall be included on all construction plans and final plats submitted for approval:

   The Party of the First Part, hereinafter called "Grantor," does hereby grant, bargain, sell, release and convey unto Kershaw County, hereinafter called "Grantee," its successors and assigns, sewer lines and appurtenances incidental thereto including but not limited to pipes, manholes and fittings and other components comprising the sewer system as shown on hereon, in fee simple, together with an exclusive easement, twenty (20) feet in width together with the right during the course of operation, construction, and/or maintenance to use such additional width as may be necessary on either side of the aforesaid right-of-way herein granted, for the purpose of operation, construction, and/or maintenance of said sewer lines and appurtenances through and under the lands hereon described, together with the right of ingress and egress across said property at all times, and the right to excavate and refill ditches and/or trenches, and the further right to remove trees, bushes, undergrowth, crops and/or other obstructions interfering with the operation, construction and/or maintenance of said sewer lines and appurtenances. The grantor hereby agrees that no construction (including, but not limited to, buildings, paving, pipe lines or other utilities) will be allowed within the limits of this easement without the prior approval of Kershaw County.

_____	_____
Date	Owner (Grantor)
_____	_____
Date	Owner (Grantor)

5:2.4-5 Preliminary Plan Approval Procedure

The Planning Official shall review the preliminary plat for compliance with the requirements of this Ordinance and verify that the plat is in substantial conformance with the sketch plan as approved by the Planning and Zoning Commission. Within twenty (20) working days of receipt

of the preliminary plat, the Planning Official shall approve, approve conditionally, or disapprove the plat. If the preliminary plat is disapproved or approved conditionally, the reasons for such action shall be conveyed to the applicant. The reasons for disapproval shall refer specifically to those parts of the sketch plan, the Comprehensive Plan, ordinance, or regulation with which the preliminary plat does not conform. On conditional approval, the Planning Official may require the applicant to resubmit the preliminary plat with all recommended changes before approving said plat. A decision of the Planning Official may be appealed to the Planning and Zoning Commission. The appeal must be filed within sixty (60) days of the administrative decision, and shall be heard at the next regular Planning and Zoning Commission meeting scheduled at least fifteen (15) days after the appeal is filed. If the preliminary plat is found to conform to all requirements of the Ordinance, the Planning Official shall notify the applicant.

The County Engineer shall review the construction plans for compliance with the requirements of this Ordinance. Within twenty (20) working days of receipt of the construction plans, the County Engineer shall approve, approve conditionally, or disapprove the construction plans. If the construction plans are disapproved or approved conditionally, the reasons for such action shall be conveyed in writing to the applicant and copied to the Planning Official. The reasons for disapproval shall refer specifically to those parts of the Ordinance or regulation with which the plans do not conform. On conditional approval, the County Engineer may require the applicant to resubmit the construction plans with all recommended changes before approving said plans. A decision of the County Engineer may be appealed to the Planning and Zoning Commission. The appeal must be filed within sixty (60) days of the administrative decision, and shall be heard at the next regular Planning and Zoning Commission meeting scheduled at least fifteen (15) days after the appeal is filed. If the construction plans are found to conform to all requirements of the Ordinance, the County Engineer shall notify the applicant and the Planning Official in writing.

Upon final approval of the preliminary plat, and upon receipt of written final approval of the construction plans from the County Engineer, the Planning Official shall note approval in writing on at least two (2) copies of the preliminary plat. One (1) copy shall be retained by the Planning and Zoning Office and one (1) copy given to the applicant. Written approval on the preliminary plat shall state that the approval is to proceed under supervision of the County with the installation of site improvements; and to proceed with the preparation of the final plat. The approval must further state that preliminary plan approval does not authorize the applicant to sell or otherwise transfer lots or parcels within the platted subdivision. The Planning Official shall sign and date this written statement.

Where applicable, a phased clearing plan per the provisions of this Ordinance shall be submitted and approved before site development activities are permitted.

5:2.4-6 Final Plat

A. **Submittal Requirements**
   Prior to recording the final plat with the Register of Deeds, thus creating individual lots of record that can be sold or transferred, the final plat must be submitted to the Planning and Zoning office for review and approval for recording. The final plat must contain the following:

B. **Plat Information**
   1. **General Information**

a. Title "FINAL PLAT FOR: _____ (name of land development)." The name of the development (subdivision, commercial complex, etc.) shall not duplicate or approximate the name of any other development in the County.
b. Name, address, and telephone number of developer/applicant and/or owner/applicant.
c. Name, address, and telephone number(s) of the professional person(s) responsible for the subdivision's design, or for the design of any public improvements, and for the surveys.
d. North arrow, scale, and date.
e. Tract boundaries and acreage.
f. Tax map survey (TMS) number(s).
g. Vicinity map.

Site Information

a. Location, names, and right-of-way widths of streets, alleys, sidewalks, paths, and/or greenways within the tract.
b. Location and dimensions of all existing rights-of-way and easements either on or adjacent to the property to be subdivided. Specifics must be given as to whether utilities are located within the easements or rights-of-way, and the location of poles and/or towers must be shown.
c. Size and location of sewers, water mains, drains, culverts, or other underground facilities within the street or within the right-of-way of streets or roads adjoining the tract.
d. Layout of other easements, indicating width and use.
e. Layout of all blocks and lots, including building setback lines; scaled dimensions of lots, consecutive lot and block numbers, and total number of lots.
f. The location, dimensions, and acreage of all common open space property to be set aside for the common use of property owners in the subdivision or group development with designation of the purpose thereof and conditions, if any, of the dedication or reservation.
g. Indication of the use of all lots (single-family, two-family, multi-family, townhouse, offices, commercial, warehousing, industrial, etc.). Proposed uses shall not be contrary to those permitted by the zoning district regulations of this Ordinance.

2. **Surveyor Certification**

The signature, seal, and certification of a Registered Professional Land Surveyor to the effect that the final plat accurately reflects a survey made by him/her, that any change from the description appearing in the last recorded transfer of land contained in the final plat is so indicated, that all monuments shown thereon actually exist and their position is accurately shown, and that all dimensional and geodetic details are correct.

3. **Certificate of Approval for Recording**

(To be recorded with the approved final plat.)

The subdivision plat shown hereon has been found to comply with the Zoning and Land Development Regulations of Kershaw County and has been approved for recording in the office of the Register of Deeds of Kershaw County, South Carolina.

_____ _____

Date Planning Official

Note: This certificate is an acknowledgment by the County that all required improvements have been installed and inspected for compliance, or financial guarantees ensuring installation of required improvements have been received as required by this Ordinance.

4. **Certificate of Ownership and Dedication** - The following must be completed by the property owner:

   It is hereby certified that I am (we are) the owner(s) of the property shown and described hereon and that I (we) hereby dedicate said streets; walks; parks; rights-of-way; sewer lines to include manholes and manhole castings, fittings and other components, and service lines to the right-of-way boundaries; and other sites to public use as specifically noted hereon. It being understood that I (we) hereby warrant said facilities and agree to bear any costs associated with correcting any defects in said facilities for a period of one (1) year from the date of final plat approval.

_____	_____
Date	Owner
_____	_____
Date	Owner

5. **Certification for Private Roads and Facilities**

   All private roads and facilities must be marked as private on the final plat and all subsequent plats of individual lots must also be marked with the following notation:

   Any streets, walks, parks, and other sites as specifically noted hereon shall be perpetually maintained by a homeowners' association and will not be accepted for maintenance by Kershaw County. The homeowners' association shall be a legally chartered entity that is registered with the SC Secretary of State.

_____	_____
Date	Owner
_____	_____
Date	Owner

Note: All property owners shall sign and legally record an approved road maintenance and/or other facility agreement. This agreement shall be binding and transfer with the property, and shall be referenced in the deed covering the property that the road and/or other facility is private. The subdivision final plat and each individual parcel plat shall depict the roadway and/or other facilities as privately maintained.

6. **Sewer Easement Certification** - The following certification, as applicable, shall be included on all construction plans and final plats submitted for approval:

The Party of the First Part, hereinafter called "Grantor," does hereby grant, bargain, sell, release and convey unto Kershaw County, hereinafter called "Grantee," its successors and assigns, sewer lines and appurtenances incidental thereto including but not limited to pipes, manholes and fittings and other components comprising the sewer system as shown on hereon, in fee simple, together with an exclusive easement, twenty (20) feet in width together with the right during the course of operation, construction, and/or maintenance to use such additional width as may be necessary on either side of the aforesaid right-of-way herein granted, for the purpose of operation, construction, and/or maintenance of said sewer lines and appurtenances through and under the lands hereon described, together with the right of ingress and egress across said property at all times, and the right to excavate and refill ditches and/or trenches, and the further right to remove trees, bushes, undergrowth, crops and/or other obstructions interfering with the operation, construction and/or maintenance of said sewer lines and appurtenances. The grantor hereby agrees that no construction (including, but not limited to, buildings, paving, pipe lines or other utilities) will be allowed within the limits of this easement without the prior approval of Kershaw County.

_____	_____
Date	Owner (Grantor)
_____	_____
Date	Owner (Grantor)

5:2.4-7 Final Plat Approval Procedure

The Planning Official shall review the final plat for compliance with the final plat submittal requirements of this Ordinance. The Planning Official may stamp a final plat approved for recording upon receiving the following:

A. **Performance Financial Guarantee**

The developer/owner shall deposit with the County a performance financial guarantee in the amount of fifteen (15) percent of the total cost of improvements to cover any expenses associated with correcting and repairing any defects which may surface during the warranty period. The County Engineer shall review and approve documentation of the total cost of improvement. In the event defects do surface and the developer does not correct said defects, the County may take action to do so using the deposited funds. In the absence of any defects or where the cost of any needed repairs is less than the amount deposited, the balance shall be returned to the developer/owner. At the conclusion of the warranty period, the County may accept said dedicated streets and other improvements into the County maintenance system. The warranty period shall be the one (1) year period commencing on the date the final plat is recorded with the Register of Deeds. The performance financial guarantee shall be one (1) of the following approved by the Finance Director:

1. Surety bond made out to Kershaw County from a surety bonding company authorized to do business in South Carolina.

2. Irrevocable letter of credit from a bank or other reputable institution.
3. Escrow account where applicant may deposit cash or other instruments readily convertible into cash at face value with the County or to the County in escrow with a bank.
4. Prepayment to the County with any unexpended funds to be returned to the applicant.
5. Other Financial Assurances - Such other financial assurances that the Finance Director finds will reasonably guarantee the availability of fifteen (15) percent of the total cost of improvements to cover any expenses associated with correcting and repairing any defects which may surface during the warranty period.

Any document providing such financial guarantee required under this section shall be in such form and substance as specified by and satisfactory to the County. The required performance financial guarantee (completed and fully executed) shall be a condition of final plat approval and shall be delivered to and approved by the Finance Director prior to the recordation of the final plat and/or the subdivision of the affected property by plat, deed, or otherwise.

B. Written approval from the County Engineer that shall mean the final plat accurately depicts as-built conditions as approved and inspected by County Engineer, Public Works Department, and/or other applicable departments. Refer to as-built engineering plan requirements in the Stormwater Management Standards and Street Standards of this Article.
C. Written confirmation from Kershaw County Mapping Official that a digital submission which is an exact depiction of the hard copy to be approved for recording has been received.
D. Digital submission requirements for final plats:
   1. Digital copy of plat in dwg or dxf format.
   2. GPS centerline of all new roads using an adequate amount of multiple GPS points to ensure an accurate depiction of the roads.
   3. Use of NAD 1983 US State Plane Coordinate System when collecting centerline data.
E. Written confirmation for Kershaw County E-911 Addressing that all road names have been approved and recorded.

5:2.4-8 Appeal to Planning and Zoning Commission

A decision of the Planning Official and/or County Engineer may be appealed to the Planning and Zoning Commission. The appeal must be filed within sixty (60) days of the administrative decision, and shall be heard at the next regular Planning and Zoning Commission meeting scheduled at least fifteen (15) days after the appeal is filed.

5:2.5 Large Acreage Single Family Residential Developments on Private Roads

5:2.5-1 Large Acreage Single-Family Residential Development Criteria

Large acreage developments are permitted only if the following criteria are met:

A. No flag lots or access easements are allowed.
B. Minimum lot size of ten (10) acres with an approximate depth to width ratio of six to one (6:1) or less.
C. Creates no public roads for maintenance by Kershaw County. Any road shall be perpetually maintained by the homeowners' association and will not be accepted for maintenance by Kershaw County. The homeowners' association shall be a legally chartered entity that is registered with the SC Secretary of State. All property owners shall sign and legally record

an approved road maintenance agreement. This agreement shall be binding and transfer with the property, and shall be referenced in the deed covering the property that the road is private. The subdivision plat and each individual parcel plat shall depict the roadway as privately maintained.

D. The privately maintained road shall:
   1. Terminate in a cul-de-sac within the property.
   2. Not connect two or more roads.
   3. Have a minimum right-of-way of fifty (50) feet.

E. The privately maintained road shall meet Kershaw County engineering specifications for private dirt roads. The Planning Official and County Engineer may consider alternate design standards in consideration of factors such as:
   1. Limited use.
   2. Site topographic or geophysical conditions.
   3. Stormwater management.
   4. The preservation of any natural features on the site.
   5. The avoidance of areas of environmental sensitivity.
   6. The minimizing of negative impacts and alteration of natural features.
   7. The avoidance of adversely affecting ground water and aquifer recharge.
   8. The reduction of cut and fill.
   9. The avoidance of unnecessary impervious cover.
   10. The prevention of flooding.
   11. The taking into account of other site-specific design considerations.

5:2.5-2 Preliminary Plans

A. **Submittal Requirements**

Due to the low density and limited use nature of such developments, it is the intent of this Article that the submittal process be streamlined to the extent practicable to insure orderly development in keeping with the intent of the design standards of this Article. The applicant is encouraged to request a pre-application conference with the Planning Official, County Engineer, and other County personnel. The objective is to aid the applicant in submitting a preliminary plan. Once the Planning Official and County Engineer have approved the preliminary plan, the applicant may begin construction.

The preliminary plan for large acreage developments on private roads serves as both the preliminary plat and constructions plans. The applicant shall submit five (5) sets of a preliminary plan to include the following as applicable:

1. **General Information**
   a. Proposed name of development which shall not duplicate or approximate the name of any other development in the County.
   b. Name, address, and telephone number of developer/applicant and/or owner/applicant.
   c. Name, address, and telephone number of the professional person(s) responsible for the subdivision's design, and for the surveys.
   d. North arrow, scale, and date, including revision dates.
   e. Tract boundaries and acreage.
   f. Phase boundaries and acreage.
   g. Tax Map Survey Number(s).
   h. Vicinity map.
   i. Date.

2. **Site Information**
   a. The location of topographical lines, at two (2) foot intervals (survey verified) extending at least 100 feet outside the subdivision, wetlands, floodplain areas, and storm drainage ditches.
   b. Current zoning and land use (e.g. residential, commercial, timberland, etc.) of subject site.
   c. Political lines, if applicable, and identification of all surrounding land use and zoning. Any adjoining subdivision shall be identified by name.
   d. Location, size, elevation, easements, and other appropriate description of any existing facilities or utilities, including, but not limited to existing streets, sewers, drains, water mains, water bodies, streams, and other pertinent features such as swamps, railroads, and buildings at the point of connection to proposed facilities and utilities within the subdivision. The water elevations of adjoining lakes or streams at the date of the survey and the approximate 100-year flood elevations of such lakes or streams.
3. **Planned Improvements**
   a. Layout of streets, alleys, sidewalks, paths, and/or greenways.
   b. Layout of all blocks and lots, scaled dimensions of lots, consecutive lot and block numbers, and total number of lots.
   c. Layout of easements and rights-of-way, indicating width and use.
   d. The location, dimensions, and acreage of all common open space property proposed to be set aside for the common use of property owners in the proposed development with designation of the purpose thereof.
   e. Staking plan showing proposed cut and fill, and borrow areas, etc.
   f. Profiles showing existing and proposed elevations along the center lines of all new roads. The elevation along the center lines of existing roads shall be shown within 100 feet of their intersection with new roads. Approximate radii of all curves, lengths of tangents, and central angles on all streets.
   g. Copies of all applicable encroachment permits.
   h. All elevations shall be referred to most recent vertical datum where public water and/or public sewers are to be installed.
   i. Erosion prevention, sediment control, and stormwater drainage plans showing the acreage of each drainage area affecting the proposed subdivision, both on-site and off-site, to include, but not limited to location, size, and invert elevations of proposed stormwater drains, stormwater detention/retention pond details, and any other applicable structural and non-structural stormwater best management practices details and notes.
   j. All details, notes, and references required by the construction standards and specifications of Kershaw County, any other local government or organization providing any utility, and the SCDHEC.

5:2.5-3 Preliminary Plan Approval Procedure

The Planning Official and County Engineer shall review the preliminary plan for compliance with the requirements of this Ordinance. Within twenty (20) working days of receipt of the preliminary plan, the Planning Official and County Engineer shall approve, approve conditionally, or disapprove the preliminary plan. If the preliminary plan is disapproved or approved conditionally, the reasons for such action shall be conveyed to the applicant. The

reasons for disapproval shall refer specifically to those parts of the Comprehensive Plan, ordinance, or regulation with which the preliminary plan does not conform. On conditional approval, the Planning Official and/or County Engineer may require the applicant to resubmit the preliminary plan with all recommended changes before approving said plan. A decision of the Planning Official and/or County Engineer may be appealed to the Planning and Zoning Commission. The appeal must be filed within sixty (60) days of the administrative decision, and shall be heard at the next regular Planning and Zoning Commission meeting scheduled at least fifteen (15) days after the appeal is filed. If the preliminary plan is found to conform to all requirements of the Ordinance, the Planning Official shall notify the applicant.

Upon final approval of the preliminary plan, and upon receipt of written final approval of the plan from Kershaw County Engineer, the Planning Official shall note approval in writing on at least two (2) copies of the preliminary plan. One (1) copy shall be retained by the Planning and Zoning Office and one (1) copy given to the applicant. Written approval on the preliminary plan shall state that the approval is to proceed under supervision of the County with the installation of site improvements; and to proceed with the preparation of the final plat. The County Engineer/ Public Works Director shall develop guidelines and schedules for inspections during site construction. The approval must further state that preliminary plan approval does not authorize the applicant to sell or otherwise transfer lots or parcels within the platted subdivision. The Planning Official shall sign and date this written statement.

Where applicable, a phased clearing plan per the provisions of this Ordinance shall be submitted and approved before site development activities are permitted.

5:2.5-4 Final Plat

A. **Submittal Requirements**

Prior to recording the final plat with the Register of Deeds, thus creating individual lots of record that can be sold or transferred, the final plat must be submitted to the Planning and Zoning Office for review and approval for recording. The final plat must contain the following:

B. **Plat Information**

1. **General Information**
   a. Title "FINAL PLAT FOR: _____ (name of land development)." The name of the development shall not duplicate or approximate the name of any other development in the County.
   b. Name, address, and telephone number of developer/applicant and/or owner/applicant.
   c. Name, address, and telephone number(s) of the professional person(s) responsible for the subdivision's design, or for the design of any public improvements, and for the surveys.
   d. North arrow, scale, and date.
   e. Tract boundaries and acreage.
   f. Tax map survey (TMS) number(s).
   g. Vicinity map.
2. **Site Information**
   a. Location, names, and right-of-way widths of streets, alleys, sidewalks, paths, and/or greenways within the tract.

b. Location and dimensions of all existing rights-of-way and easements either on or adjacent to the property to be subdivided. Specifics must be given as to whether utilities are located within the easements or rights-of-way, and the location of poles and/or towers must be shown.
c. Size and location of sewers, water mains, drains, culverts, or other underground facilities within the street or within the right-of-way of streets or roads adjoining the tract.
d. Layout of other easements, indicating width and use.
e. Layout of all blocks and lots, including building setback lines; scaled dimensions of lots, consecutive lot and block numbers, and total number of lots.
f. The location, dimensions, and acreage of all common open space property to be set aside for the common use of property owners in the subdivision with designation of the purpose thereof and conditions, if any, of the dedication or reservation.

3. **Surveyor Certification**

The signature, seal, and certification of a Registered Professional Land Surveyor to the effect that the final plat accurately reflects a survey made by him/her, that any change from the description appearing in the last recorded transfer of land contained in the final plat is so indicated, that all monuments shown thereon actually exist and their position is accurately shown, and that all dimensional and geodetic details are correct.

4. **Certificate of Approval for Recording**

(To be recorded with the approved final plat.)

> The subdivision plat shown hereon has been found to comply with the Zoning and Land Development Regulations of Kershaw County and has been approved for recording in the office of the Register of Deeds of Kershaw County, South Carolina.
>
> _____ _____
> Date Planning Official

Note: This certificate is an acknowledgment by the County that all required improvements have been installed and inspected for compliance, or financial guarantees ensuring installation of required improvements have been received as required by this Ordinance.

5. **Certification for Private Roads and Facilities**

All private roads and facilities must be marked as private on the final plat, and all subsequent plats of individual lots must also be marked with the following notation:

> Any streets, walks, parks, and other sites as specifically noted hereon shall be perpetually maintained by a homeowners' association and will not be accepted for maintenance by Kershaw County. The homeowners' association shall be a legally chartered entity that is registered with the SC Secretary of State.
>
> _____ _____
> Date Owner
>
> _____ _____
> Date Owner

Note: All property owners shall sign and legally record an approved road maintenance and/or other facility agreement. This agreement shall be binding and transfer with the property, and it shall be referenced in the deed covering the property that the road and/or other facility is private. The subdivision final plat and each individual parcel plat shall depict the roadway and/or other facilities as privately maintained.

6. **Sewer Easement Certification** - The following certification, as applicable, shall be included on all construction plans and final plats submitted for approval:

   The Party of the First Part, hereinafter called "Grantor," does hereby grant, bargain, sell, release and convey unto Kershaw County, hereinafter called "Grantee," its successors and assigns, sewer lines and appurtenances incidental thereto including but not limited to pipes, manholes and fittings and other components comprising the sewer system as shown on hereon, in fee simple, together with an exclusive easement, twenty (20) feet in width together with the right during the course of operation, construction, and/or maintenance to use such additional width as may be necessary on either side of the aforesaid right-of-way herein granted, for the purpose of operation, construction, and/or maintenance of said sewer lines and appurtenances through and under the lands hereon described, together with the right of ingress and egress across said property at all times, and the right to excavate and refill ditches and/or trenches, and the further right to remove trees, bushes, undergrowth, crops and/or other obstructions interfering with the operation, construction and/or maintenance of said sewer lines and appurtenances. The grantor hereby agrees that no construction (including, but not limited to, buildings, paving, pipe lines or other utilities) will be allowed within the limits of this easement without the prior approval of Kershaw County.

_____	_____
Date	Owner (Grantor)
_____	_____
Date	Owner (Grantor)

5:2.5-5 Final Plat Approval Procedure

The Planning Official shall review the final plat for compliance with the final plat submittal requirements of this Ordinance. The Planning Official may stamp a final plat approved for recording upon receiving the following:

A. Written approval from the County Engineer/Public Works Director that shall mean the final plat accurately depicts as-built conditions as approved and inspected by County Engineer/ Public Works Department. Refer to as-built engineering plan requirements in the stormwater management standards and street standards sections of this Article.
B. Written confirmation from Kershaw County Mapping Official that a digital submission which is an exact depiction of the hard copy to be approved for recording has been received.

C. Digital submission requirements for final plats:
   1. Digital copy of plat in dwg or dxf format.
   2. GPS centerline of all new roads using an adequate amount of multiple GPS points to ensure an accurate depiction of the roads.
   3. Use of NAD 1983 US State Plane Coordinate System when collecting centerline data.
D. Written confirmation from Kershaw County E-911 Addressing that all road names have been approved and recorded.
E. The Planning Official shall review the final plat for compliance with the final plan submittal requirements for large acre developments on private roads.

5:2.5-6 Appeal to Planning and Zoning Commission

A decision of the Planning Official, Public Works Director, and/or County Engineer may be appealed to the Planning and Zoning Commission. The appeal must be filed within sixty (60) days of the administrative decision, and shall be heard at the next regular Planning and Zoning Commission meeting scheduled at least fifteen (15) days after the appeal is filed.

5:2.6 Group Developments

A group development is a development of a single tract of land or adjacent tracts of land under the same ownership or control. Group developments include commercial, retail, industrial, institutional, multi-family residential, and manufactured home parks.

5:2.6-1 Major and Minor Group Developments Defined

A. **Major Group Developments**
   Major group developments are as follows:
   1. **Commercial, Industrial, Institutional** - A group commercial, industrial, or institutional development consists of a multiple use or multiple occupant commercial, industrial, or institutional complex of a combined 25,000 square feet or greater of gross floor area, or a single-use, single-occupant commercial or industrial building of 25,000 square feet or greater of gross floor area. Examples are shopping centers and malls; commercial business or industrial parks; and “big box” retail.
   2. **Housing** - A group housing development consists of:
      a. Multi-family apartment buildings, duplexes, triplexes, quadruplexes, and townhouses on a single tract of land or adjacent tracts of land under the same ownership or control containing a combined total of more than ten (10) dwelling units.
      b. Manufactured Home Parks - All manufactured home parks are classified as major group developments.
B. **Minor Group Developments**
   Minor group developments are as follows:
   1. Commercial, industrial, or institutional developments that consist of a multiple use or multiple occupant commercial, industrial, or institutional complex of a combined square footage of less than 25,000 square feet of gross floor area, or a single-use, single-occupant commercial or industrial building of less than 25,000 square feet of gross floor area.
   2. Multi-family apartment buildings, duplexes, triplexes, quadruplexes, and townhouses on a single tract of land or adjacent tracts of land under the same ownership or control

containing a combined total of more than two (2) or no more than ten (10) dwelling units.

5:2.6-2 Minor Group Development Approval Process

Minor group developments do not require Planning and Zoning Commission review prior to approval with the exception that both minor and major group developments within the Lake Wateree Overlay District (LWOD) require Planning and Zoning Commission approval per the special LWOD development standards. The applicant shall complete an application for a group development that shall be prepared by the Planning Official. The applicant must submit two (2) sets of zoning and land development site plans addressing off-street parking; buffering, screening, and landscaping requirements; resource conservation; and other provisions of this Ordinance as determined by the Planning Official. All of the required site plan information (off-street parking, buffering, screening, landscaping, resource conservation, etc.) must be displayed on a single sheet of paper. The Planning Official shall prepare site plan guidance documents to aid the applicant in preparing the site plans. Within ten (10) working days of submission of

zoning and land development site plan, the Planning Official shall approve, approve with changes, or reject the plan. If rejected, changes, additional analysis, or other information necessary to make an approval determination shall be identified and transmitted to the applicant. Zoning and land development site plans shall be approved prior to the issuance of the building permit. Site construction landscaping per the approved zoning and land development site plan shall be completed and approved prior to the issuance of a certificate of occupancy.

The applicant must submit two (2) sets of engineering (civil) plans and calculations that shall be in compliance with the applicable engineering specifications and standards of this Ordinance. The County Engineer shall prepare guidance documents to aid the applicant in preparing the engineering plans. Engineering site plans shall be approved prior to the issuance of the building permit. Site construction per the approved engineering site plan shall be completed and approved prior to the issuance of a certificate of occupancy. Within twenty (20) working days of receipt of the engineering plans, the County Engineer shall approve, approve conditionally, or disapprove the engineering plans. If the engineering plans are disapproved or approved conditionally, the reasons for such action shall be conveyed in writing to the applicant and copied to the Planning Official. The reasons for disapproval shall refer specifically to those parts of the Ordinance or regulation with which the plans do not conform. On conditional approval, the County Engineer may require the applicant to resubmit the engineering plans with all recommended changes before approving said plans.

A decision of the Planning Official and/or County Engineer may be appealed to the Planning and Zoning Commission. The appeal must be filed within sixty (60) days of the administrative decision, and shall be heard at the next regular Planning and Zoning Commission meeting scheduled at least fifteen (15) days after the appeal is filed. If the preliminary plan is found to conform to all requirements of the Ordinance, the Planning Official shall notify the applicant.

5:2.6-3 Major Group Development Approval Process

A. **Submittal Requirements**

The applicant shall complete an application for a major group development that shall be prepared by the Planning Official.

1. **Zoning and Land Development Site Plan for Major Group Developments**
   The applicant shall submit to the Planning Official ten (10) copies of the site plan drawn per the requirements of as stipulated below.
2. **General Site Plan Information**
   a. Tax Map Survey (TMS) number(s) for the subject parcel(s).
   b. Contact information for the responsible party
   c. The site plan must be of sufficient scale to show the entire subject parcel, adjacent boundary lines of adjoining properties, and abutting roads.
   d. TMS number, owner information, and land use (commercial, residential, vacant, etc.) of adjoining properties.
   e. Right-of-way of abutting road(s).
   f. Existing and proposed encroachments (curb cuts).
   g. All existing and proposed structures, their size, height, elevation, and their setbacks from property lines.
   h. Flood zone and wetlands verification and base flood elevation as applicable.
   i. Total acreage in the tract proposed for group development and a statement of total contiguous acreage owned by the developer(s).
   j. The location and size of all proposed utilities and storm drainage easements.
   k. The location of topographical lines (closest available contour intervals - United States Geological Survey, USGS contours acceptable).
   l. The intended use of each building and number of units (if multiple use) the building is designed to accommodate.
   m. Vicinity map.
   n. Date.
3. **Landscaping**
   A landscape plan including all required buffers, screening, landscaping, open space, and Tree Protection provisions of this Ordinance. The landscape plan shall:
   a. Designate areas to be reserved for landscaping. The specific design of landscaping shall be sensitive to the physical and design characteristics of the site.
   b. Indicate the location and dimensions of landscaped areas (including required buffers, screening, interior parking, and other landscaping), plant materials (planting schedule), decorative features, etc.
   c. Identify all existing healthy pine trees of twenty (20) inches or greater diameter at breast height (DBH) and all other tree species of eight (8) inches or greater DBH.
4. **Parking**
   The site plan must include an off-street parking facilities plan designed in accordance with the off-street parking regulations of this Ordinance. The plan must include:
   a. The required number of parking spaces per the zoning district regulations of this Ordinance.
   b. The required number of handicapped parking spaces and their locations.
   c. Parking slip and aisle dimensions.
   d. Off-street loading.
   e. Parking area landscaping per the landscaping provisions of this Ordinance.
   f. Site parking, aisles, vehicular and pedestrian ingress and egress, loading zones, etc. shall be laid out to facilitate safe and efficient internal traffic circulation.

5. **Signage**

The applicant is not required to submit sign permit applications at the time of group development application submittal. The developer may, however, opt to include the signage plan per the signage regulations of this Ordinance. Final certification (certificate of occupancy or use permit) shall not be granted until any required sign permits have been applied for and approved per the provisions of this Ordinance.

B. **Approval Process**

1. **Planning and Zoning Commission Review**

The Planning Official shall review the zoning and land development site plan for completeness. A site plan deemed complete by the Planning Official will be placed on the agenda for the next regular Planning and Zoning Commission meeting scheduled at least forty-five (45) days after the site plan is filed. The Planning Official shall distribute copies of the site plan to all affected County agencies for review and comment. The Planning Official shall present the application to the Planning and Zoning Commission in a staff report with the Planning and Zoning Department's analysis and recommendations and any other County agency's comments that have been received by the Planning Official. For residential major group developments, the Planning and Zoning Department's analysis and recommendations shall include any impact assessment reports received from commenting agencies per the adequate public facilities provisions of this section. The Planning and Zoning Commission shall consider the prevention of traffic hazards and the provisions of off-street parking and required utilities. In addition, the Commission will consider compliance of the proposed group development with the applicable design standards and required improvements per this Ordinance and with the goals and objectives of the Comprehensive Plan.

The Planning and Zoning Commission shall approve, approve conditionally, or disapprove the site plan. If the site plan is disapproved or approved conditionally, the reasons for such action shall be conveyed to the applicant. The reasons for disapproval shall refer specifically to those parts of the Comprehensive Plan, ordinance, or regulation with which the plan does not conform. On conditional approval, the Planning and Zoning Commission may require the applicant to resubmit the site plan with all recommended changes before approving said plat. The Planning and Zoning Commission may direct the Planning Official to review the resubmitted site plan and to make a determination of approval, or it may require that the resubmitted plan be brought before the Planning and Zoning Commission for review at the next regular Planning and Zoning Commission meeting scheduled at least fifteen (15) days after the resubmitted site plan is filed.

If the site plan is found to conform to all requirements of the Ordinance, approval subject to traffic management plan provisions of this Ordinance shall be given by the Planning and Zoning Commission or Planning Official as directed by the Planning and Zoning Commission.

2. **Engineering Plans**

The applicant may submit engineering plans to the County Engineer subject to final approval of the zoning and land development site plans by the Planning and Zoning Commission or the applicant may submit the engineering plans upon receipt of final approval of the zoning and land development site plans by the Planning and Zoning Commission. Engineering plan submittal requirements shall be as follows:

a. Staking plan showing proposed cut and fill, borrow areas, etc.
b. Profiles showing existing and proposed elevations along the center lines of all internal roads, including drives and lanes. The elevation along the center lines of existing roads shall be shown within 100 feet of their intersection with new roads. Approximate radii of all curves, lengths of tangents, and central angles on all streets.
c. Plans and profiles showing the locations and typical cross-section of street pavements including curbs and gutters, sidewalks, storm drainage easements, rights-of-ways, manholes, catch basins, and other storm drainage structures.
d. The locations of street trees, street lighting, and street signs.
e. The location, size, invert elevations, and easements (as applicable) for sanitary sewers, potable water lines, gas lines, underground cable and electric lines, fire hydrants, and other utilities and structures; showing connection to and exact location and size of all existing water, gas, or other underground utilities or structures.
f. Copies of all applicable encroachment permits.
g. Location, size, elevation, easements, and other appropriate description of any existing facilities or utilities, including, but not limited to existing streets, sewers, drains, water mains, water bodies, streams, and other pertinent features such as swamps, railroads, and buildings at the point of connection to proposed facilities and utilities within the development. The water elevations of adjoining lakes or streams at the date of the survey and the approximate 100-year flood elevations of such lakes or streams.
h. All elevations shall be referred to most recent vertical datum where public water and/or public sewers are to be installed.
i. Erosion prevention, sediment control, and stormwater drainage plans showing the acreage of each drainage area affecting the proposed development, both on-site and off-site, to include, but not limited to location, size, and invert elevations of proposed stormwater drains, stormwater detention/retention pond details, and any other applicable structural and non-structural stormwater best management practices (BMP) details and notes.
j. Topography at a contour interval of two (2) feet (survey verified), referred to vertical datum currently required by FEMA when public water and/or public sewers are to be installed or portions(s) of the subdivision that would be inundated by a 100-year frequency flood.
k. All details, notes, and references required by the construction standards and specifications of Kershaw County, any other local government or organization providing any utility, and SCDHEC.
l. A construction sequence.
m. Title, name, address, telephone, and signature of the South Carolina Registered Engineer and Surveyor responsible for the plans with plan preparation date, including revision dates.

Where applicable, a phased clearing plan per the provisions of this Ordinance shall be submitted and approved before site development activities are permitted.

3. **Approval**

a. Within twenty (20) working days of receipt of the engineering plans, the County Engineer shall approve, approve conditionally, or disapprove the engineering plans. If the engineering plans are disapproved or approved conditionally, the reasons for such action shall be conveyed in writing to the applicant and copied to the Planning Official. The reasons for disapproval shall refer specifically to those parts of the Ordinance or regulation with which the plans do not conform. On conditional approval, the County Engineer may require the applicant to resubmit the plans with all recommended changes before approving said plans.

A decision of the County Engineer may be appealed to the Planning and Zoning Commission. The appeal must be filed within sixty (60) days of the administrative decision, and shall be heard at the next regular Planning and Zoning Commission meeting scheduled at least fifteen (15) days after the appeal is filed. If the preliminary plan is found to conform to all requirements of the Ordinance, the Planning Official shall notify the applicant.

The County Engineer shall submit written approval prior to the issuance of building permits per the buildings and building regulations provisions of this Ordinance.

b. When sewer utility easements are granted or rights-of-way are dedicated to Kershaw County, a plat shall be prepared for recording showing said easements and rights-of-way. The plat shall contain the applicable certifications:

1.) **Certification of Ownership and Dedication** - The following must be completed by the property owner:

It is hereby certified that I am (we are) the owner(s) of the property shown and described hereon and that I (we) hereby dedicate said streets; walks; parks; rights-of-way; sewer lines to include manholes and manhole castings, fittings and other components, and service lines to the right-of-way boundaries; and other sites to public use as specifically noted hereon. It being understood that I (we) hereby warrant said facilities and agree to bear any costs associated with correcting any defects in said facilities for a period of one (1) year from the date of final plat approval.

_____	_____
Date	Owner
_____	_____
Date	Owner

2.) **Sewer Easement Certification** - The following certification, as applicable, shall be included on all construction plans and final plats submitted for approval:

The Party of the First Part, hereinafter called "Grantor," does hereby grant, bargain, sell, release and convey unto Kershaw County, hereinafter called "Grantee," its successors and assigns, sewer lines and appurtenances incidental thereto including but not limited to pipes, manholes and fittings and other components comprising the sewer system as shown on hereon, in fee simple, together with an exclusive easement, twenty (20) feet in width together with the right during the course of operation, construction, and/or maintenance to use such additional width as may be necessary on either side of the aforesaid right-of-way herein granted, for the purpose of operation, construction, and/or maintenance of said sewer lines and appurtenances through and under the lands hereon described, together with the right of ingress and egress across said property at all times, and the right to excavate and refill ditches and/or trenches, and the further right to remove trees, bushes, undergrowth, crops and/or other obstructions interfering with the operation, construction and/or maintenance of said sewer lines and appurtenances. The grantor hereby agrees that no construction (including, but not limited to, buildings, paving, pipe lines or other utilities) will be allowed within the limits of this easement without the prior approval of Kershaw County.

_____	_____
Date	Owner (Grantor)
_____	_____
Date	Owner (Grantor)

5:2.7 Development of Planned Development Districts

These provisions apply to the development of planned development districts (PDD) after final PDD zoning designation has been received per the PDD zoning provisions of this Ordinance. The PDD site plans submitted for the PDD re-zoning application shall serve in lieu of a sketch plan. The PDD site plan requirements are repeated below.

5:2.7-1 Planned Development District Site Plan

A. The proposed title of the project, project designer, and the developer(s).
B. The boundaries of the property involved; the general location of all existing easements, property lines, existing streets, and buildings; and other existing physical features on the project site.
C. The approximate location of existing and proposed sanitary and storm sewers, water mains, street lighting, and other service facilities in or near the project.
D. The general location and dimensions of proposed streets.
E. The conceptual land use plan:

1. Area by land use (i.e. retail, single-family detached residential, multi-family, townhouses, office, park, green space etc.).
2. Specific allowable uses for each area.
3. A tabulation of the number of acres in each use area.
4. Maximum densities expressed in dwelling units per gross acre for residential, and floor/area ratio for non- residential.
5. Building setbacks.
6. Maximum impervious surface ratio.
7. Maximum building heights.

F. The position of the proposed development in relation to its surroundings. Current land use and zoning of the subject site, adjacent property, and a site location (vicinity) map shall be provided.

G. Alternate design standard plans, as applicable. Alternate design standards may include, but are not limited to:
   1. Parking and loading.
   2. Buffers, landscaping, and common open space.
   3. Street design.
   4. Signage plan.

H. Date.

5:2.7-2 Preliminary Plan

Upon final approval of the PDD site plans and final traffic management plan determination by the Planning and Zoning Commission, the applicant shall submit the preliminary plan.

The preliminary plans submittal shall be in compliance with the PDD site plan as approved by the Planning and Zoning Commission and County Council.

A. **General Submittal Requirements**
   1. Plans sheets shall be of a convenient scale of not less than one (1) inch equals 100 feet, adjustable depending upon lot sizes and total acreage.
   2. Plan sheets should be of standard size of not greater than 24”x36” and no smaller than 24”x18”.
   3. The number of items presented on any one (1) sheet should be limited such that each item is clearly defined and easily reviewed.
   4. Sheets overcrowded with too much information such that they are difficult and/or confusing to review shall be avoided.
   5. A line and object legend shall be located within the plans.

B. **Submittal and Distribution**

   Preliminary plans shall consist of two (2) submittals: The preliminary plat and the construction plans.
   1. The applicant shall submit six (6) copies of the preliminary plat and three (3) copies of the construction plans to the Planning and Zoning Department.
   2. The Planning Official will route one (1) copy of the preliminary plat and (2) copies of the construction plans to the County Engineer.
   3. The Planning Official and/or County Engineer will distribute relevant copies of the preliminary plats and/or construction plans to other affected County departments for review and comment.

C. **The Preliminary Plat**

Preliminary plats for planned development districts shall contain the following:

1. **General Information**
   a. Proposed name of the development which shall not duplicate or approximate the name of any other development in the County.
   b. Name, address, and telephone number(s) of the developer/applicant and/or the owner/applicant.
   c. Name, address, and telephone number(s) of the professional person(s) responsible for the PDD's design, or for the design of any public improvements, and for the surveys.
   d. North arrow, scale, and date, including revision dates.
   e. Tract boundaries and acreage.
   f. Phase boundaries and acreage.
   g. Tax Map Survey number(s).
   h. Vicinity map.
2. **Site Information**
   a. The location of topographical lines, at two (2) foot intervals (survey verified) extending at least 100 feet outside the PDD, wetlands, floodplain areas, and storm drainage ditches.
   b. Current zoning and land use (e.g. residential, commercial, timberland, etc.) of subject site.
   c. Political lines, if applicable, and identification of all surrounding land use and zoning. Any adjoining subdivision or development shall be identified by name.
   d. Location, names, and right-of-way widths of existing or platted streets within and in the vicinity of tract. In case of re-subdivisions, a copy of existing plat with proposed re-subdivisions superimposed shall be submitted on a separate sheet.
   e. Location and dimensions of all existing rights-of-way and easements either on or adjacent to the property to be developed. Specifics must be given as to whether utilities are located within the easements or rights-of-way, and the location of poles and/or towers must be shown.
   f. Size and location of existing sewers, water mains, drains, culverts, or other underground facilities within the street or within the right-of-way of streets or roads adjoining the tract.
   g. Elevations where public water and/or public sewers are to be installed referencing the most recent vertical datum (if applicable).
3. **Planned Improvements**
   a. Layout of streets, alleys, sidewalks, paths, and/or greenways.
   b. Layout of all blocks and lots, including building setback lines, scaled dimensions of lots, consecutive lot and block numbers, and total number of lots.
   c. Layout of all easements and rights-of-way, indicating width and use.
   d. The location, dimensions, and acreage of all common open space property proposed to be set aside for the common use of property owners in the proposed PDD with designation of the purpose thereof and conditions, if any, of the dedication or reservation.
   e. Indication of the use of all lots (single-family, two-family, multi-family, townhouse, offices, commercial, warehousing, industrial, etc.). Proposed uses shall not be contrary to those regulations stipulated in the approved PDD.

5:2.7-3 Construction Plans

The construction plans shall include the following if and as such improvements are applicable to the proposed development:

A. Staking plan showing proposed cut and fill, borrow areas, etc.
B. Profiles showing existing and proposed elevations along the center lines of all new roads. The elevation along the center lines of existing roads shall be shown within 100 feet of their intersection with new roads. Approximate radii of all curves, lengths of tangents, and central angles on all streets.
C. Plans and profiles showing the locations and typical cross-section of street pavements including curbs and gutters, sidewalks, storm drainage easements, rights-of-ways, manholes, catch basins, and other storm drainage structures.
D. The locations of street trees, street lighting, and street signs.
E. The location, size, invert elevations, and easements (as applicable) for sanitary sewers, potable water lines, gas lines, underground cable and electric lines, fire hydrants, and other utilities and structures; showing connection to and exact location and size of all existing water, gas, or other underground utilities or structures.
F. Copies of all applicable encroachment permits.
G. Location, size, elevation, easements, and other appropriate description of any existing facilities or utilities, including, but not limited to existing streets, sewers, drains, water mains, water bodies, streams, and other pertinent features such as swamps, railroads, and buildings at the point of connection to proposed facilities and utilities within the PDD. The water elevations of adjoining lakes or streams at the date of the survey and the approximate 100-year flood elevations of such lakes or streams.
H. All elevations shall be referred to most recent vertical datum where public water and/or public sewers are to be installed.
I. Erosion prevention, sediment control, and stormwater drainage plans showing the acreage of each drainage area affecting the proposed PDD, both on-site and off-site, to include, but not limited to location, size, and invert elevations of proposed stormwater drains, stormwater detention/retention pond details, and any other applicable structural and non-structural stormwater best management practices details and notes.
J. Topography at a contour interval of two (2) feet (survey verified), referred to vertical datum currently required by FEMA when public water and/or public sewers are to be installed where there are portions(s) of the PDD that would be inundated by a 100-year frequency flood.
K. All details, notes, and references required by the construction standards and specifications of Kershaw County, any other local government or organization providing any utility, and SCDHEC.
L. A construction sequence.
M. Title, name, address, telephone, and signature of the South Carolina Registered Engineer and Surveyor responsible for the plans with plan preparation date, including revision dates.
N. When sewer utility easements are granted or rights-of-way are dedicated to Kershaw County, the construction plans shall contain the applicable certifications:
    1. **Certification of Ownership and Dedication** - The following must be completed by the property owner:

    It is hereby certified that I am (we are) the owner(s) of the property shown and described hereon and that I (we) hereby dedicate said streets; walks; parks; rights-

of-way; sewer lines to include manholes and manhole castings, fittings and other components, and service lines to the right-of-way boundaries; and other sites to public use as specifically noted hereon. It being understood that I (we) hereby warrant said facilities and agree to bear any costs associated with correcting any defects in said facilities for a period of one (1) year from the date of final plat approval.

_____	_____
Date	Owner
_____	_____
Date	Owner

2. **Sewer Easement Certification** - The following certification, as applicable, shall be included on all construction plans and final plats submitted for approval:

   The Party of the First Part, hereinafter called "Grantor," does hereby grant, bargain, sell, release and convey unto Kershaw County, hereinafter called "Grantee," its successors and assigns, sewer lines and appurtenances incidental thereto including but not limited to pipes, manholes and fittings and other components comprising the sewer system as shown on hereon, in fee simple, together with an exclusive easement, twenty (20) feet in width together with the right during the course of operation, construction, and/or maintenance to use such additional width as may be necessary on either side of the aforesaid right-of-way herein granted, for the purpose of operation, construction, and/or maintenance of said sewer lines and appurtenances through and under the lands hereon described, together with the right of ingress and egress across said property at all times, and the right to excavate and refill ditches and/or trenches, and the further right to remove trees, bushes, undergrowth, crops and/or other obstructions interfering with the operation, construction and/or maintenance of said sewer lines and appurtenances. The grantor hereby agrees that no construction (including, but not limited to, buildings, paving, pipe lines or other utilities) will be allowed within the limits of this easement without the prior approval of Kershaw County.

_____	_____
Date	Owner (Grantor)
_____	_____
Date	Owner (Grantor)

5:2.7-4 Preliminary Plan Approval Procedure

Within twenty (20) working days of receipt of the preliminary plat, the Planning Official shall review the preliminary plat for compliance with the requirements of this Ordinance and verify

that the plat is in substantial conformance with the sketch plan as approved by the Planning and Zoning Commission. The Planning Official shall approve, approve conditionally, or disapprove the plat. If the preliminary plat is disapproved or approved conditionally, the reasons for such action shall be conveyed to the applicant. The reasons for disapproval shall refer specifically to those parts of the PDD site plan, the Comprehensive Plan, Ordinance, or regulation with which the preliminary plat does not conform. On conditional approval, the Planning Official may require the applicant to resubmit the preliminary plat with all recommended changes before approving said plat. A decision of the Planning Official may be appealed to the Planning and Zoning Commission. The appeal must be filed within sixty (60) days of the administrative decision, and shall be heard at the next regular Planning and Zoning Commission meeting scheduled at least fifteen (15) days after the appeal is filed. If the preliminary plat is found to conform to all requirements of the Ordinance, the Planning Official shall notify the applicant.

Within twenty (20) working days of receipt of the construction plans, the County Engineer shall review the construction plans for compliance with the requirements of this Ordinance. The County Engineer shall approve, approve conditionally, or disapprove the construction plans. If the construction plans are disapproved or approved conditionally, the reasons for such action shall be conveyed in writing to the applicant and copied to the Planning Official. The reasons for disapproval shall refer specifically to those parts of the Ordinance or regulation with which the plans do not conform. On conditional approval, the County Engineer may require the applicant to resubmit the construction plans with all recommended changes before approving said plans. A decision of the County Engineer may be appealed to the Planning and Zoning Commission. The appeal must be filed within sixty (60) days of the administrative decision, and shall be heard at the next regular Planning and Zoning Commission meeting scheduled at least 15 days after the appeal is filed. If the construction plans are found to conform to all requirements of the Ordinance, the County Engineer shall notify the applicant and the Planning Official in writing.

Upon final approval of the preliminary plat, and upon receipt of written final approval of the construction plans from the County Engineer, the Planning Official shall note approval in writing on at least two (2) copies of the preliminary plat. One (1) copy shall be retained by the Planning and Zoning office and one (1) copy given to the applicant. Written approval on the preliminary plat shall state that the approval is to proceed under supervision of the County with the installation of site improvements; and to proceed with the preparation of the final plat. The approval must further state that preliminary plan approval does not authorize the applicant to sell or otherwise transfer lots or parcels within the platted subdivision. The Planning Official shall sign and date this written statement.

Where applicable, a phased clearing plan per the provisions of this Ordinance shall be submitted and approved before site development activities are permitted.

5:2.7-5 Final Plat

A. **Submittal Requirements**

Prior to recording the final plat with the Register of Deeds, thus creating individual lots of record that can be sold or transferred, the final plat must be submitted to the Planning and Zoning office for review and approval for recording. The final plat must contain the following:

B. **Plat Information**

1. **General Information**
   a. Title "FINAL PLAT FOR: _____ (name of the PDD)." The name of the PDD shall not duplicate or approximate the name of any other development in the County.
   b. Name, address, and telephone number of developer/applicant and/or owner/applicant.
   c. Name, address, and telephone number(s) of the professional person(s) responsible for the development's design, or for the design of any public improvements, and for the surveys.
   d. North arrow, scale, and date.
   e. Tract boundaries and acreage.
   f. Tax Map Survey (TMS) number(s).
   g. Vicinity map.
2. **Site Information**
   a. Location, names, and right-of-way widths of streets, alleys, sidewalks, paths, and/or greenways within the tract.
   b. Location and dimensions of all existing rights-of-way and easements either on or adjacent to the property to be redeveloped. Specifics must be given as to whether utilities are located within the easements or rights-of-way, and the location of poles and/or towers must be shown.
   c. Size and location of sewers, water mains, drains, culverts, or other underground facilities within the street or within the right-of-way of streets or roads adjoining the tract.
   d. Layout of other easements, indicating width and use.
   e. Layout of all blocks and lots, including building setback lines; scaled dimensions of lots, consecutive lot and block numbers, and total number of lots.
   f. The location, dimensions, and acreage of all common open space property to be set aside for the common use of property owners in the PDD with designation of the purpose thereof and conditions, if any, of the dedication or reservation.
   g. Indication of the use of all lots (single-family, two-family, multi-family, townhouse, offices, commercial, warehousing, industrial, etc.). Proposed uses shall not be contrary to those stipulated in the approved PDD and as shown on the preliminary plat.
3. **Surveyor Certification**

   The signature, seal, and certification of a Registered Professional Land Surveyor to the effect that the final plat accurately reflects a survey made by him/her, that any change from the description appearing in the last recorded transfer of land contained in the final plat is so indicated, that all monuments shown thereon actually exist and their position is accurately shown, and that all dimensional and geodetic details are correct.
4. **Certificate of Approval for Recording**

   (To be recorded with the approved final plat.)

   > The plat shown hereon has been found to comply with the Zoning and Land Development Regulations of Kershaw County and has been approved for recording in the office of the Register of Deeds of Kershaw County, South Carolina.

_____	_____
Date	Planning Official

Note: This certificate is an acknowledgment by the County that all required improvements have been installed and inspected for compliance, or financial guarantees ensuring installation of required improvements have been received as required by this Ordinance.

5. **Certificate of Ownership and Dedication** - The following must be completed by the property owner:

   It is hereby certified that I am (we are) the owner(s) of the property shown and described hereon and that I (we) hereby dedicate said streets; walks; parks; rights-of-way; sewer lines to include manholes and manhole castings, fittings and other components, and service lines to the right-of-way boundaries; and other sites to public use as specifically noted hereon. It being understood that I (we) hereby warrant said facilities and agree to bear any costs associated with correcting any defects in said facilities for a period of one (1) year from the date of final plat approval.

_____	_____
Date	Owner
_____	_____
Date	Owner

6. **Certification for Roads and Facilities**

   All private roads and facilities must be marked as private on the final plat and all subsequent plats of individual lots must also be marked with the following notation:

   Any streets, walks, parks, and other sites as specifically noted hereon shall be perpetually maintained by a homeowners' association and will not be accepted for maintenance by Kershaw County. The homeowners' association shall be a legally chartered entity that is registered with the SC Secretary of State.

_____	_____
Date	Owner
_____	_____
Date	Owner

Note: All property owners shall sign and legally record an approved road maintenance and/or other facility agreement. This agreement shall be binding and transfer with the property, and shall be referenced in the deed covering the property that the road and/or other facility is private. The PDD final plat and each individual parcel plat shall depict the roadway and/or other facilities as privately maintained.

7. **Sewer Easement Certification** - The following certification, as applicable, shall be included on all construction plans and final plats submitted for approval:

The Party of the First Part, hereinafter called "Grantor," does hereby grant, bargain, sell, release and convey unto Kershaw County, hereinafter called "Grantee," its successors and assigns, sewer lines and appurtenances incidental thereto including but not limited to pipes, manholes and fittings and other components comprising the sewer system as shown on hereon, in fee simple, together with an exclusive easement, twenty (20) feet in width together with the right during the course of operation, construction, and/or maintenance to use such additional width as may be necessary on either side of the aforesaid right-of-way herein granted, for the purpose of operation, construction, and/or maintenance of said sewer lines and appurtenances through and under the lands hereon described, together with the right of ingress and egress across said property at all times, and the right to excavate and refill ditches and/or trenches, and the further right to remove trees, bushes, undergrowth, crops and/or other obstructions interfering with the operation, construction and/or maintenance of said sewer lines and appurtenances. The grantor hereby agrees that no construction (including, but not limited to, buildings, paving, pipe lines or other utilities) will be allowed within the limits of this easement without the prior approval of Kershaw County.

_____	_____
Date	Owner (Grantor)
_____	_____
Date	Owner (Grantor)

5:2.7-6 Final Plat Approval Procedure

The Planning Official shall review the final plat for compliance with the final plan submittal requirements of this Ordinance. The Planning Official may stamp a final plat approved for recording upon receiving the following:

A. **Performance Financial Guarantee**

The developer/owner shall deposit with the County a performance financial guarantee in the amount of fifteen (15) percent of the total cost of improvements to cover any expenses associated with correcting and repairing any defects which may surface during the warranty period. The County Engineer shall review and approve documentation of total cost of improvement. In the event defects do surface and the developer does not correct said defects, the County may take action to do so using the deposited funds. In the absence of any defects or where the cost of any needed repairs is less than the amount deposited, the balance shall be returned to the developer/owner. At the conclusion of the warranty period, the County may accept said dedicated streets and other improvements into the County maintenance system. The warranty period shall be the one (1) year period commencing on the date the final plat is recorded with the Register of Deeds. The performance financial guarantee shall be one (1) of the following approved by the Finance Director:

1. Surety bond made out to Kershaw County from a surety bonding company authorized to do business in South Carolina.
2. Irrevocable letter of credit from a bank or other reputable institution.

3. Escrow account where applicant may deposit cash or other instruments readily convertible into cash at face value, with the County or to the County in escrow with a bank.
4. Prepayment to the County with any unexpended funds to be returned to the applicant.
5. Other Financial Assurances - Such other financial assurances that the Finance Director finds will reasonably guarantee the availability of fifteen (15) percent of the total cost of improvements to cover any expenses associated with correcting and repairing any defects which may surface during the warranty period.

Any document providing such financial guarantee required under this section shall be in such form and substance as specified by and satisfactory to the County. The required performance financial guarantee (completed and fully executed) shall be a condition of final plat approval and shall be delivered to and approved by the Finance Director prior to the recordation of the final plat and/or the subdivision of the affected property by plat, deed, or otherwise.

B. Written approval from the County Engineer that shall mean the final plat accurately depicts as-built conditions as approved and inspected by County Engineer, Public Works Department, and/or other applicable departments. Refer to as-built engineering plan requirements in the Stormwater Management Standards and Street Standards sections of this Article.
C. Written confirmation from Kershaw County Mapping Official that a digital submission which is an exact depiction of the hard copy to be approved for recording has been received.
D. Digital submission requirements for final plats:
   1. Digital copy of plat in dwg or dxf format.
   2. GPS centerline of all new roads using an adequate amount of multiple GPS points to ensure an accurate depiction of the roads.
   3. Use of NAD 1983 US State Plane Coordinate System when collecting centerline data.
E. Written confirmation for Kershaw County E-911 Addressing that all road names have been approved and recorded.

5:2.8 Traffic Management Plan

5:2.8-1 Purpose

A traffic management plan (TMP) is an evaluation of the effect of traffic generated by a development on the operation and safety of the adjacent public roads. Such analysis shall include an identification of traffic impact mitigation measures needed to improve the safety, operation, and flow of vehicular and pedestrian movement into and out of a development. A traffic management plan may be required in an application for:

A. A major subdivision of forty (40) or more total lots in all phases and/or a major subdivision with public access to an unimproved public road without dedicated right-of-way.
B. Major group developments which are:
   1. A commercial, industrial, or institutional major group development.
   2. A multi-family apartment building containing forty (40) or more units.
   3. Multiple multi-family apartment buildings on a single tract of land or adjacent tracts of land under the same ownership or control containing a combined total of forty (40) or more units.
   4. Multiple structures on a single tract of land or adjacent tracts of land under the same ownership or control containing two or more dwelling units (duplexes, triplexes, quadruplexs) containing a combined total of forty (40) or more units.

5. Manufactured home parks containing more than forty (40) units.

C. Planned development districts.

5:2.8-2 Determination of Need for Requiring a Traffic Management Plan

A. **Conference**

At the time of submittal of the sketch plan or site plan, as applicable, to the Planning and Zoning Department, the applicant shall schedule a conference with Planning Staff and other interested and affected County agencies to discuss the project and its potential traffic impacts. In preparation for the conference, the applicant shall prepare, at minimum, the current level of service (LOS) of the major road(s) impacted by the development for which data is available and the calculated LOS of the referenced impacted roads at build-out. The LOS shall be calculated utilizing the volume to capacity ratio method and utilize the following data:

1. **Calculation of LOS**
   a. Number of average daily trips (ADT) per the most current edition of the *Institute of Transportation Engineers Trip Generation Manual* and the *ITE Trip Generation Handbook* that will be generated by the major subdivision, PDD, or group development.
   b. The most current South Carolina Department of Transportation (SCDOT) traffic count data available in closest proximity to the site.
   c. The capacity of the roads (vehicles per hour) which traffic count data is used per the current Transportation Research Board's *Highway Capacity Manual.*
2. **Alternative Method for Calculation of LOS -** The build-out LOS of the proposed project may be determined using the following data:
   a. Number of average daily trips (ADT) per the most current edition of the *Institute of Transportation Engineers Trip Generation Manual* and the *ITE Trip Generation Handbook* that will be generated by the major subdivision, PDD, or group development.
   b. The most current SCDOT traffic count data available in closest proximity to the site.
   c. The most recent SCDOT *Maximum ADT by Level of Service (LOS) for Urban Facilities for SCDOT Travel Demand Models* chart.

B. **Evaluation**

Planning Staff, in conference with the applicant, will evaluate the potential for traffic impact of the project considering the nature and size of the project and the cumulative impacts of the project in conjunction with existing and planned development in the vicinity of the project. The objective of the evaluation shall be to preliminarily assess the capacity of the affected road system to accommodate the traffic that will be generated by the project, and to make a recommendation to the Planning and Zoning Commission on the need for further assessment. Normally, a TMP will be recommended if the project is expected to increase the traffic count at the nearest count station by twenty (20) percent or greater. Any road improvements proposed by the developer to mitigate traffic impacts will be considered in the evaluation and recommendation.

5:2.8-3 Action by the Planning and Zoning Commission

Upon initial approval of the sketch plan, the Planning and Zoning Commission will evaluate Staff recommendations and comments, data, and presentations of the applicant and/or other

interested parties in determining if the Planning and Zoning Commission will require a traffic management plan as a condition for final approval of the sketch plan.

The Planning and Zoning Commission may require additional information on the potential impact on traffic of the proposed project in lieu of requiring a full traffic management plan.

If the Planning and Zoning Commission determines that a traffic management plan will be required or is requiring additional information in lieu of a traffic management plan, the Planning and Zoning Commission may direct the Planning Official to review the required TMP or additional information and to make a determination of approval, or it may require that the required TMP or additional information be brought before the Planning and Zoning Commission for review at the next regular Planning and Zoning Commission meeting scheduled at least fifteen (15) days after the TPM or additional information is filed with the Planning and Zoning office.

The Planning and Zoning Commission shall approve, approve conditionally, or disapprove the sketch plan based on the approval of the submitted traffic management plan or additional information in lieu of a TMP. If the TMP is disapproved or approved conditionally, the reasons for such action shall be conveyed to the applicant. On conditional approval, the Planning and Zoning Commission may require the applicant to resubmit the TMP with all Planning and Zoning Commission requirements before approving said TMP. The Planning and Zoning Commission may direct the Planning Official to review the resubmitted TMP and to make a determination of approval, or it may require that the resubmitted TMP be brought before the Planning and Zoning Commission for review at the next regular Planning and Zoning Commission meeting scheduled at least fifteen (15) days after the resubmitted TMP is filed.

5:2.8-4 Planning and Zoning Commission Approval of Transportation Management Plan

Final approval of the sketch plan or site plan, as applicable, is contingent upon approval of the Planning and Zoning Commission of a required TMP, approval of additional information requested in lieu of a TMP, or determination that a TMP or additional information will not be required.

5:2.8-5 Coordination with South Carolina Department of Transportation (SCDOT)

It shall be the applicant's responsibility to establish contact with the SCDOT at the early planning stages of the development. The SCDOT may require the applicant to prepare a traffic impact study that meets the criteria of the Institute of Transportation Engineers. If the SCDOT requires a traffic impact study, the Kershaw County Planning and Zoning Commission shall accept the traffic impact study in lieu of the traffic management plan.

5:2.8-6 Transportation Management Plan Report

The traffic management plan report must be prepared by a qualified Professional Engineer, and must contain, at minimum, the following:

A. The report must be prepared using the most current edition of the *Institute of Transportation Engineers Trip Generation Manual* and the *ITE Trip Generation Handbook*; and must employ the methodology detailed in the most current edition of the National Research Council's Transportation Research Board's (TRB) *Highway Capacity Manual*. The SCDOT *Maximum ADT by Level of Service (LOS) for Urban Facilities for SCDOT Travel Demand*

Models may be also used. Equivalent trip generation and highway capacity methodologies may be accepted by the Planning and Zoning Department in a pre-application conference, if requested by the applicant.

B. The report must contain an executive summary of major findings, conclusions, and recommendations presented in a clear and concise format. The summary should include a basic, brief description of the methodology employed. All executive summary supporting data, worksheets, intersection counts, etc. shall be contained in the body or appendices of the report.

C. An introduction with the general description of the proposed project and the TMP objectives. Include a breakdown in acreage of the general land use types within the study area (residential, neighborhood commercial, general commercial, industrial, etc.) and density and/or intensity of non-residential land uses (gross square feet of leasable space).

D. **Existing Conditions of the Study Area**
   1. Provide current traffic counts, conducted in accordance to acceptable professional standards, on all affected roadways.
   2. Identify all signalized and unsignalized road intersections and turning movements at major intersections.
   3. Include road classifications, number of lanes, lane widths, and speed limits.
   4. Provide maximum trip generation rates under current conditions.
   5. Provide current a.m. and p.m. peak hour trip assignments and LOS. If proposed project is a retail development, provide current Saturday/week-end a.m./p.m. peak hour trip assignments and LOS.

E. **Proposed Project**
   1. Provide a site map showing proposed access points.
   2. Show proposed land uses including density and/or intensity measurements.
   3. Identify phased traffic impact including first year and at build-out that includes a comparison of a.m. and p.m. peak hour trip assignments and LOS of the proposed development to existing development conditions.

F. **Analysis and Mitigation**
   1. Identify needed improvements for signalized intersections and unsignalized intersections.
   2. Provide recommended storage lengths for required new or improved turn lanes, including consideration of overlapping transitions, competing storage, or other such restrictions using SCDOT standards at a minimum.
   3. Analyze the safety and operational impacts of any proposed median breaks or relocations.
   4. Identify all possible mitigation measures needed to ensure that an appropriate LOS for the area is met. Assume a LOS of C as the base.
   5. Make a preliminary identification of the party(s) responsible to implement the proposed mitigation measures.

5:2.9 Adequate Public Facilities

5:2.9-1 Purpose

The policy of timing development with the availability of adequate public facilities to support the development is a recurrent theme of the Comprehensive Plan. It is the policy of the Comprehensive Plan to:

A. Coordinate the expansion of development with information regarding potential impacts on schools, water and sewer systems, drainage, transportation systems, public safety, and other public services and infrastructure.
B. Review land development and zoning regulations to strengthen provisions for discouraging development in those areas of the County where existing and/or planned facilities and infrastructure will not be adequate to support such development.
C. Coordinate the planning efforts of the County, its municipalities, the school district, and the utility providers.

5:2.9-2 Applicability

In consideration of sketch plan approval of major subdivisions greater than forty (40) units, major group developments, and planned development districts, the Planning and Zoning Commission shall consider the adequacy of current public facilities and future facilities identified in the Capital Improvement Plan and funded by County Council to absorb the impact that such developments will place on these systems.

5:2.9-3 Impact Assessments

The traffic management plan provisions of this Ordinance shall inform the Planning and Zoning Commission of potential impacts of a proposed development on the transportation system. The Planning Official shall work with respective public service providers to develop impact assessment reporting forms to be submitted to the Planning and Zoning Department. The impact assessment reporting forms shall be approved by the Planning and Zoning Commission.

For proposed major subdivisions greater than forty (40) units, major group developments, and planned development districts, impact assessment reporting forms shall be submitted to, at minimum, the following agencies, as applicable:

A. Kershaw County School District (for impact assessments of residential developments)
B. Kershaw County Utilities (sewer)
C. Kershaw County Engineer
D. Kershaw County Environmental Services (solid waste and recycling)
E. Kershaw County Public Works
F. Kershaw County Fire Service
G. Lugoff-Elgin Fire District
H. Kershaw County Sheriff
I. City of Camden Water and Sewer
J. Lugoff-Elgin Water Authority
K. Cassatt Water Company
L. Bethune Rural Water
M. KershawHealth (formerly Kershaw County Medical Center)/EMS
N. United States Postal Service

5:2.9-4 Planning and Zoning Commission Consideration of Impact Assessments

Agencies shall have fifteen (15) days to submit impact assessment forms to the Planning and Zoning Department. All submitted impact assessments shall be included in a Planning and Zoning Department staff report and analysis on the proposed development prepared for the Planning and Zoning Commission. Any agency which has not submitted an assessment form

after fifteen (15) days or at the time the staff report to the Planning and Zoning Commission is written, whichever is later, shall be noted as having not responded.

The Planning and Zoning Commission shall include the impact assessments submitted by the responding agencies in determining the approval of the project. The Planning and Zoning Commission shall consider any development agreements offered by the developer to mitigate negative impacts identified in the impact assessment reporting forms.

5:2.10 Environmental Impact Assessments

If an environmental impact assessments (EIA) for real estate transactions conducted under ASTM E1527 standards, and/or environmental site transaction screening (TS) conducted under ASTM E1528 standards has been completed on a site seeking approval of a land development project, a copy of the EIA and/or TS report(s) shall be submitted to the Planning Official for Staff and Planning and Zoning Commission review in evaluating the project for approval.

5:2.11 Development Agreements

As of the effective date of this Ordinance, Kershaw County may enter into a binding development agreement with the developer for long-term developments on large tracts of land. The development agreement shall meet all the requirements under SC Code of Law, Title 6, Chapter 31 § 6-31-10, et seq., *The South Carolina Local Government Development Agreement Act* (the Act). The development agreement gives the developer a vested right for the term of the agreement to proceed according to the provisions of the Ordinance in existence on the execution date of the agreement per §6-31-80 of the Act. Benefits to Kershaw County may include enhanced development design standards, on and off-site infrastructure, public facility and other improvements and funding, affordable housing, and other benefits negotiated with the developer in return for vesting of development rights for the term of the agreement.

5:2.11-1 Minimum Requirements

A. The property must contain a minimum of twenty-five (25) acres of highland as defined as land above the 100-year floodplain as delineated on the official FEMA flood maps of Kershaw County.
B. Development Time - The following table specifies the maximum term of a development agreement by the size of the project:

Table 5-5 MAXIMUM TERM OF DEVELOPMENT AGREEMENT BY SIZE OF PROJECT

Size of Project	Maximum Term of Development Agreement
25-250 acres of highland	5 years
>250-1000 acres of highland	10 years
>1000-2000 acres of highland	20 years
>2000 acres of highland	As set by Kershaw County and the developer

The maximum term of a development agreement may be extended by a subsequent agreement.

5:2.11-2 Procedures for Adoption of Development Agreements

A. **Drafting of Agreement**
The developer shall consult with the Kershaw County Planning and Zoning Department, Administration, Engineering, Utilities, Public Works Department, County Attorney, and other applicable County Staff in drafting the terms and conditions of the development agreement. The development agreement shall include, but is not limited to, all elements as required by §6-31-60 of the Act.

B. **Planning and Zoning Commission Public Hearing**
The Planning and Zoning Commission shall hold a public hearing. A notice of intent to consider the development agreement shall be published in a newspaper of general circulation at least fifteen (15) days prior to the hearing. The notices shall include:
1. The specific location of the property.
2. The proposed uses of the development.
3. The location where a copy of the proposed agreement may be obtained.

The Planning and Zoning Commission chairman shall announce at the Planning and Zoning Commission's public hearing the date, time, and place that the County Council will hold a public hearing on the proposed development agreement which shall be held at least fifteen (15) days after the Planning and Zoning Commission public hearing

C. **Planning and Zoning Commission Recommendation to County Council**
The Planning and Zoning Commission shall review the development agreement and make a recommendation to the Kershaw County Council to:
1. Accept the development agreement as drafted;
2. accept the development agreement with amendments; or
3. deny the development agreement.

D. **County Council Public Hearing**
The County Council shall hold a public hearing. A notice of intent to consider the development agreement shall be published in a newspaper of general circulation at least fifteen (15) days prior to the hearing. The notices shall include:
1. The specific location of the property.
2. The proposed uses of the development.
3. The location where a copy of the proposed agreement may be obtained.

E. **Development Agreement Ordinance**
The proposed development agreement shall be approved by the County Council by adoption of an ordinance.

F. **Recording of Development Agreement**
The developer shall record the development agreement with the Kershaw County Register of Deeds within fourteen (14) days after the development agreement ordinance is executed.

5:2.11-3 Annual Review

The Planning Official shall conduct annual reviews to assess the progress of the development for the purposes of determining if the developer is demonstrating good faith compliance with the terms of the agreement. The Planning Official shall prepare a written report to the Planning and Zoning Commission, County Council, and the developer within thirty (30) days following the annual review. When the annual review reveals a material breach of the agreement the following steps shall be taken:

A. **Notice of Breach**
The Planning Official shall include in the report a notice of breach setting out the specific nature of the breach and the evidence supporting this determination.

B. **Corrective Action Plan**
The developer shall have thirty (30) days to respond with a corrective action plan with the time frame to cure the material breach. The developer should be given a reasonable time to correct the breach, commensurate with the nature of the breach. The Planning Official may approve the corrective action plan. A decision of the Planning Official may be appealed to County Council.

C. **Termination of Agreement**
Upon failure of the developer to respond to the notice of breach within thirty (30) days, or to correct the breach within the time given, the County Council may unilaterally terminate or modify the agreement. However, failure of the developer to meet a commencement or completion date shall not, in and of itself, automatically constitute a material breach of the agreement, but must be judged based on the totality of the circumstances.

The developer shall have an opportunity to rebut the determination in executive session of County Council, or consent to amend the agreement to meet the concerns raised by the findings and determination of the breach.

5:2.12 Improvement Guarantees

5:2.12-1 Planning Staff

For purposes of this section, *Planning Staff* refers to the Planning and Zoning Director, Public Works Director, County Engineer, and County Administrator. The Planning and Zoning Director, Public Works Director, and County Engineer, as applicable, shall make recommendations to the County Administrator, who shall have final approval of improvement guarantees.

5:2.12-2 Policy

It shall be the general policy of Kershaw County that all improvements required by this Ordinance be completed prior to approval for recording of a final plat of a subdivision or development, the effect of which creates lots of record that may be sold or transferred. However, recognizing that completion of all required improvements prior to obtaining final plat approval may not in some cases be feasible, practical, or financially possible, this section provides a mechanism by which final approval may be granted, contingent upon certain required improvements being completed as and when specified by the Planning Staff and upon the applicant providing financial guarantees for the completion of such other required improvements.

Development projects must be substantially complete prior to final approval through the improvement guarantee process. In general, the development must be completed except for final road surfacing, minor grading, and minor stormwater management controls. Substantially complete includes, but is not limited to, the following site improvements:

A. Utilities Installed
   1. Water, where applicable.
   2. Sewer, where applicable.
   3. Electricity and underground communications cables.

B. All roads completed to all-weather construction.
C. Major stormwater utilities (retention ponds, sedimentation basins, etc) completed.
D. Approvals from all other applicable Federal, State, and local regulatory authorities secured.

5:2.12-3 Financial Guarantees

Where final plat approval is requested by the applicant/developer prior to the completion of all required improvements, the Planning and Zoning Director, Public Works Director, and County Engineer, as applicable, shall recommend to the County Administrator financial guarantees of such type and in such amounts (not less than 125 percent of cost of materials and installation) sufficient to guarantee with reasonable certainty that the required improvements will be completed as and when required by the Planning Staff. Said financial guarantees to be used for such purposes may include one (1) or more of the following types, if acceptable to the Planning Staff:

A. Surety bond made out to Kershaw County from a surety bonding company authorized to do business in South Carolina.
B. Irrevocable letter of credit from a bank or other reputable institution.
C. Escrow account where applicant may deposit cash or other instruments readily convertible into cash at face value with the County or to the County in escrow with a bank.
D. Prepayment to the County with any unexpended funds to be returned to the applicant.
E. Contract for Completion - The applicant may deliver to the County a contract for completion of the required improvements executed by the applicant and a qualified responsible and duly licensed contractor together with an executed performance bond issued by such surety as the Planning Staff might approve. Along with said contract and performance bond, the applicant shall deliver to the County the right and option to enforce the terms and conditions of the contract and the performance bond.
F. Other Financial Assurances - Such other financial assurances that the Planning Staff finds will reasonably guarantee the satisfactory completion of the required improvements as and when required.

Any document providing such financial guarantee required by the Planning Staff under this section shall be in such form and substance as specified by and satisfactory to the County. The required financial guarantee (completed and fully executed) shall be a condition of final plat approval and shall be delivered to and approved by the County Administrator prior to the recordation of the final plat and/or the subdivision of the affected property by plat, deed, or otherwise.

5:2.12-4 Option to Refuse Guarantee

The County shall have the right to refuse any of the optional financial guarantees and require construction and installation of all improvements by the developer, where:

A. Past performance of the developer has been unsatisfactory;
B. the selected option is unacceptable; or
C. for other reasons so stated.

5:2.12-5 Default of Guarantee

In the event the developer fails to install or construct the required improvements during the specified time allotted and in conformity with these regulations, the improvement guarantee shall be forfeited to the County to be used for completion of the improvements.

5:2.12-6 Allocation of Guarantee

Any funds received from financial guarantees required by this Ordinance shall be used only for the purpose of making the improvements for which said guarantees are provided.

5:2.12-7 Extension of Guarantee

If it appears to the developer that he may not complete construction of required improvements before expiration of his improvement guarantee, it shall be his obligation, at least fifteen (15) days prior to the expiration period, to submit an extended guarantee request. Such extension, if approved, shall be for a period of six (6) months. A maximum of two (2) such extensions shall be allowed.

5:2.12-8 Acceptable Format for Improvement Guarantee

Any deviation from the acceptable format below may delay acceptance of this instrument:STATE OF SOUTH CAROLINA)
)
COUNTY OF KERSHAW)

IMPROVEMENT GUARANTEE

KNOW ALL MEN BY THESE PRESENTS that we, _____, as principal, and _____, as security, are held and firmly bound unto Kershaw County, South Carolina, as oblige, in the sum of $_____, for payment whereof to the oblige, the principal and security bind themselves, their heirs, executors, administrators, successors, and assigns, jointly and severally, firmly to these presents:

Signed, sealed, and dated, this _____ day of _____, _____.

WHEREAS, application was made to the oblige for approval of a subdivision/development shown on a plat entitled "_____", dated _____, _____, and filed with Kershaw County, and said final plat was approved upon certain conditions, one of which is that an improvement guarantee in the amount of $_____ be filed with Kershaw County, South Carolina to guarantee certain improvements in said subdivision;

NOW THEREFORE, THE CONDITION OF THIS OBLIGATION is such that the above-named principal shall, within _____ from the date hereof (in no case shall the improvement guarantee be valid for more than two years), truly make and perform the required improvements and construction of public improvements in said subdivision/development in accordance with the specifications of the Kershaw County South Carolina Unified Code of Zoning and Land Development Regulations, then this obligation will be void; otherwise it will remain in full force and effect.

It is hereby understood and agreed that in the event any required improvements have not been installed within the terms of this improvement guarantee, the County may thereupon declare this guarantee to be in default and collect the sum remaining payable thereunder, and upon receipt of the proceeds thereof, the County shall install such improvements as are covered by the guarantee.

It is further understood and agreed that when the required improvements have been approved for conformity with these regulations, the guarantee shall be released and returned. In addition, if any portion of the required improvements is completed by the developer and approved by the Planning and Zoning Director, County Engineer, and/or Public Works Director, a portion of the guarantee commensurate with the cost of these completed improvements may be released and returned. In no event shall an improvement guarantee be reduced below twenty-five (25) percent of the principal amount until all improvements have been approved by the Planning and Zoning Director, County Engineer, and/or Public Works Director.

Approved and accepted
this _____ day of
_____, _____

_____ _____
County Administrator Applicant/Developer
Kershaw County, South Carolina

5:2.12-9 Acceptable Format for an Improvement Guarantee Utilizing an Irrevocable Letter of Credit

STATE OF SOUTH CAROLINA)
)
COUNTY OF KERSHAW)

IMPROVEMENT GUARANTEE
Secured by an Irrevocable Letter of Credit

KNOW ALL MEN BY THESE PRESENTS, that we, _____, as Principal, and _____, as security, are held and firmly bound unto Kershaw County, South Carolina, as oblige, in the sum of $_____, for payment whereof to the oblige, the principal and security bind themselves, their heirs, executors, administrators, successors, and assigns, jointly and severally, firmly to these presents:

Signed, sealed, and dated, this _____
day of _____, _____.

WHEREAS, application was made to the oblige for approval of a subdivision/development shown on a plat entitled "_____", dated _____, _____, and filed with Kershaw County, and said final plat was approved upon certain conditions, one of which is that an Irrevocable Letter of Credit in the amount of $_____ be given to Kershaw County, South Carolina to guarantee certain improvements in said subdivision;

NOW THEREFORE, THE CONDITION OF THE LETTER OF CREDIT is such that the above-named Principal shall, within _____ from the date hereof, truly make and

perform the required improvements and construction of public improvements in said subdivision/development in accordance with the specifications of the Kershaw County South Carolina Unified Code of Zoning and Land Development Regulations.

It is hereby understood and agreed that in the event any required improvements have not been installed within the terms of this improvement guarantee, the County may thereupon declare this guarantee to be in default and collect the sum remaining payable under the Letter of Credit, and upon receipt of the proceeds thereof, the County shall install such improvements as are covered by this Guarantee using the proceeds collected under the Letter of Credit.

It is further understood and agreed that when the required improvements have been approved for conformity with these regulations, the Letter of Credit shall be released and returned. In addition, if any portion of the required improvements is completed by the developer and approved by the Planning and Zoning Director, County Engineer, and/or Public Works Director, a portion of the amount of the Letter of Credit commensurate with the cost of these completed improvements may be returned. The Letter of Credit as a guarantee is payable to Kershaw County upon written notification by Kershaw County to _____ that _____ has not completed the improvements in accordance with this guarantee.

Approved and accepted
this _____ day of
_____, _____

_____	_____
County Administrator	Applicant/Developer
Kershaw County, South Carolina	Principal

5:2.12-10 Approval for Recording

Any final plat that is approved for recording under an improvement guarantee must be annotated as such. Once the terms of the improvement guarantee have been completed and the financial guarantee has been retired, it shall be the developer's responsibility to record a final plat without the "Approved Under Improvement Guarantee" notation, and must be done as a condition for release of the performance guarantee upon termination of the warrantee period.

5:2.12-11 Release of Improvement Guarantee

When the developer notifies the County that the terms of the improvement guarantee have been satisfied, the Public Works Director and/or County Engineer shall inspect the project to verify that work has been satisfactorily completed as stipulated in the improvement guarantee and shall submit a written report to the Planning and Zoning Director. The County Administrator shall review the report and release the improvement guarantee. The Planning and Zoning Director shall notify the applicant and financial institutions and process any release of funds to the applicant/developer.

RESERVED

RESERVED

RESERVED

RESERVED

RESERVED

RESERVED

RESERVED

RESERVED

RESERVED

RESERVED

RESERVED

5:3 LAND DEVELOPMENT DESIGN STANDARDS AND REQUIRED IMPROVEMENTS

5:3.1 Purpose

The purpose of design and improvement standards is to create functional and attractive land developments and to minimize adverse impacts. All land developments involving the subdivision of property shall meet the requirements of the Regulations for the Subdivision of Land and the Creation of Lots provisions of this Article, the applicable design standards and required improvements of this section, as well as all applicable special purpose district zoning requirements.

5:3.2 Site Design

5:3.2-1 Site Design, Generally

Site design shall take into consideration all existing local and regional plans, and shall be based on the site analysis. To the extent practicable, development shall be located:

A. to preserve any natural features on the site;
B. to avoid areas of environmental sensitivity;
C. to minimize negative impacts and alteration of natural features;
D. to avoid adversely affecting ground water and aquifer recharge;
E. to reduce cut and fill;
F. to avoid unnecessary impervious cover;
G. to prevent flooding;
H. to provide adequate access to lots and sites; and
I. to mitigate adverse effects of noise, odor, traffic, drainage, and utilities.

5:3.2-2 Site Analysis

A. **Development Site Characteristics** - An analysis shall be made of characteristics of the development site, such as
   1. geology and soil;
   2. topography;
   3. ecology;
   4. existing vegetation;
   5. structures;
   6. road networks;
   7. visual features; and
   8. past and present use of the site.

   A report of the site analysis shall be included with the major subdivision sketch plans, group development site plans, PDD site plans, and other development plans as applicable, that are submitted to the Planning and Zoning Commission for review.

B. **Site Analysis Components and Design Objectives** - The following table presents some key components of the site analysis with associated development design objectives:

Table 5-6 SITE ANALYSIS KEY COMPONENTS AND DESIGN OBJECTIVES	
Site Analysis Component	**Design Objective**
Slope and Contour Analysis	• Slopes of 0%-5% are prime buildable areas. • Avoid any development on slopes greater than 10% in areas with unsuitable soils. • Build roadways on ridges. • Delineate sensitive areas.
Hydrologic Analysis	• Avoid wetlands, floodplains, and ground water recharge areas. • Preserve natural drainage ways. • Delineate sensitive areas.
Soils Analysis	• Avoid soils unsuitable for development. • Locate stormwater controls in pervious soils (hydric soil group A and B). • Delineate sensitive areas.
Vegetation Analysis	• Avoid clear cutting as erosion control BMP. • Preserve significant trees and understory vegetation. • Delineate sensitive areas.

The layers of information from the above table can be overlaid on a common scale to create a composite inventory map to analyze the suitability of each portion of the site for the proposed development.

C. soil's runoff potential. The four hydrologic soils groups are “A”, “B”, “C” and “D”, where Group “A” generally has the smallest runoff potential and Group “D”, the greatest. Details of this classification can be found in *Urban Hydrology for Small Watersheds* published by the Engineering Division of the Natural Resource Conservation Service, U.S. Department of Agriculture, Technical Release–55. The characteristics of each group are as follows:

1. Group “A” is sand, loamy sand, or sandy loam types of soils. It has low runoff potential and high infiltration rates even when thoroughly wetted. They consist chiefly of deep, well to excessively drained sands or gravels, and have a high rate of water transmission.
2. Group “B” is silt loam or loam. It has a moderate infiltration rate when thoroughly wetted and consists chiefly of moderately deep to deep, moderately well to well drained soils with moderately fine to moderately coarse textures.
3. Group “C” soils are sandy clay loam. They have low infiltration rates when thoroughly wetted and consist chiefly of soils with a layer that impedes downward movement of water and soils with moderately fine to fine structure.
4. Group “D” soils are clay loam, silty clay loam, sandy clay, silty clay, or clay. This hydrologic soil group has the highest runoff potential. They have very low infiltration rates when thoroughly wetted, and consist chiefly of clay soils with a high swelling potential, soils with a permanent high water table, soils with a clay pan or clay layer at or near the surface, and shallow soils over nearly impervious material.

5:3.3 Conservation Subdivision and Group Development Design

5:3.3-1 Conservation Design

Conservation design is a type of residential or commercial development where sixty (60) percent or more of the developable land area is designated as undivided permanent open space; thereby permanently protecting agriculturally, environmentally, or ecologically significant areas within the parcel. The remaining developable land is subdivided into buildable lots or utilized as a group development; typically with more density than would be found in a traditional development within the zoning district. Kershaw County encourages the use of conservation design on all suitable land in all development projects.

.

5:3.3-2 Purpose

The use of conservation subdivision and group development design seeks to optimize land use in Kershaw County while maintaining a balance between the preservation of agriculturally, environmentally, and ecologically significant areas and allowing for reasonable and sustainable growth. New development shall avoid disturbance of areas or elements identified as "sensitive" or "significant." In seeking to achieve this and the goals defined in Kershaw County's Comprehensive Plan, the purpose of this Article shall be to:

A. Preserve the unique rural character of Kershaw County.
B. Permit reasonable development that is in accordance with the principles of open space conservation.
C. Accommodate the development of sustainable communities while protecting and preserving areas of agricultural, environmental, and ecological significance.
D. Maintain separation of non-compatible land uses.
E. Preserve the scenic and natural character of the County.
F. Promote an interconnected network of open space that promotes livable, sustainable subdivision development and wildlife habitat and corridors.
G. Economize in the installation of infrastructure and the provision of public services.
H. Direct development away from wetlands, floodplains, areas of highly erodable topography, and soil types unsuitable for development.

To achieve these objectives, clustering is allowed on the developable portion of the land. Clustering is a subdivision and group development design method that concentrates development in specific areas on the proposed site. The purpose of clustering is to allow increased density on a portion of the parcel, while preserving the rest as permanent open space. The overall density of the entire development property remains comparable to a traditional development within the zoning district. The concept of clustering provides for flexibility in subdivision design that fits the natural characteristics of the land and permits more useable open space, the preservation of prime agricultural land, and land containing one or more sensitive areas. Refer to Table 3:5, Schedule of Lot Area, Yard, Setback, Height, Density, Floor Area, and Impervious Surface Requirements by District to see how residential clustering applies in conservation design areas in a specific zoning district. (Note that Table 3:5 is duplicated at the end of this section.) For commercial and other non-residential developments, increased density in the developed portion of the project can be accomplished utilizing zero lot line buildings.

5:3.3-3 Applicability

The Planning and Zoning Commission encourages the use of conservation subdivision and group development design where residential subdivisions, commercial subdivisions, and group developments

are proposed on a parcel where fifty (50) percent or more of the parcel has been identified by the appropriate oversight agency as agriculturally, environmentally, or ecologically significant.

Those areas deemed to be of agricultural, environmental, or ecological significance, as defined below, shall, for the purposes of this Ordinance, be referred to as "significant." The specific characteristics of these areas are defined as follows:

A. **Agriculturally Significant Land** - Prime farmland soils as defined and delineated by the U.S. Department of Agriculture, and soils classified as "Soils of Statewide Importance" by the State Food and Agriculture Council comprised of the USDA State agency heads of the Natural Resource Conservation Service, the Farm Service Agency, and Rural Development.
B. **Erodable Lands** - Areas of incline, whether natural or man made, lacking sufficient vegetation to prevent instability, erosion, or
C. greater are subject to review by the USDA Natural Resources Conservation Service (NRCS). The NRCS will make the final determination regarding the area's erodability.
D. **Environmentally Significant Areas** - Any tract of land that contains one (1) or more of the following sensitive areas as defined by the SC Department of Natural Resources:
   1. Critical wildlife habitats - Areas containing elements vital to the survival of endangered or threatened species including, but not limited to, food sources and cover.
   2. Scenic natural areas.
E. **Flood Hazard Areas** - Areas at high risk of inundation by water as a result of a flood. Known areas of flood hazard are indicated on the Flood Insurance Rate Map for Kershaw County.
F. **Scenic Natural Areas** - Any area which contains a unique feature of the rural landscape including, but not limited to, large rock formations, hill crests, scenic rivers, mature tree stands, and/or any other feature deemed to be significant by the SC Department of Natural Resources or as demonstrated to the Kershaw County Planning and Zoning Commission.
G. **Stream Corridors** - The primary channel of a river or stream and any portions of the floodplain adjoining the channel that is reasonably required to carry and discharge its water. Refer to the water quality buffer regulations of this Article.
H. **Outstanding Natural Resource Waters** – Waters of high water quality as designated by the SC Department of Health and Environmental Control (SCDHEC) which are protected from any discharges.
I. **Wetlands** - An area saturated by surface water or ground water such that it supports the growth and existence of vegetation suited to such areas. The key indicator for wetlands is the presence of hydric soils. Hydric soils are soils susceptible to saturation by water, as defined by the USDA Natural Resources Conservation Service. Areas containing hydric soils will be subject to review by the USDA Natural Resources Conservation Service. The United States Army Corps of Engineers will make the final determination regarding the existence of a wetland.
J. **Old-Growth Forests** - An area containing contiguous wooded parcels of significant size, containing a rich diversity of native flora species in associations typical of pre-European settlement ecosystems, areas with rare, threatened, endangered, or special species, or with ancient individuals, when in combination with understory species typical of pre-European settlement ecosystems.

5:3.3-4 Process

A qualified conservation design development shall consist of a parcel in which a minimum of sixty (60) percent of the parcel is designated as
permanent open space. The portion of the parcel designated as permanent open space shall not be further subdivided and must be protected by a conservation easement held by the homeowners'

association, local conservation commission, or land trust which is recorded with the Kershaw County Register of Deeds.

Kershaw County encourages the use of conservation design on all suitable land in all development projects. All landowners and developers are encouraged to work closely with the County Planning and Zoning Staff in the design and platting process.

The developer/applicant shall supply a completed application to the Kershaw County Planning and Zoning Department which includes a draft of the conservation easement for the portion of the property that will remain as permanent open space or agricultural land, and a fully dimensioned site plan, drawn to scale, which shall demonstrate, delineate, and label all of the following:

A. The site plan submittal shall include all sketch plan, planned development district, or group development site plan elements per the requirements of this Article.
B. The location and type of sensitive areas deemed to be of agricultural, environmental, or ecological significance, as defined in this section.
C. The location and type of all proposed areas to be preserved as open space or agricultural land, including areas of mitigation and preservation.
D. For areas of agricultural preservation, a buffer strip of at least seventy-five (75) feet must be delineated. When possible, existing woodlands should be used. If not, a variety of rapidly growing indigenous trees and shrubs should be planted thickly in the buffer strip.
E. Any other provisions not specifically required or excluded herein, as required by the zoning and land development provisions of this Ordinance and all other applicable County ordinances.
F. All elements of the site plan shall be readily evident upon site inspection.
G. Elements not readily evident shall be marked for identification upon site inspection.
H. Areas designated to remain as open space or agricultural land, or areas of conservation shall be marked for identification upon site inspection.
I. All construction contracts shall include language protecting sensitive areas, agricultural land, areas of conservation, and areas containing sensitive elements.

Upon receipt of the application, the review process for the conservation subdivisions and group developments shall be the same as outlined in the procedures for plat and land development approval of this Ordinance. Included with the final plat, the developer shall submit an agreement regarding the liability for and maintenance of the open space. In addition, the developer must include a conservation easement/open space covenant protecting the open space from any further development.

The homeowners' association, local conservation commission, or land trust shall administer the permanent open space, and is responsible for upkeep, insurance, and any other responsibilities associated with ownership and/or administration of the land. The terms and conditions of the conservation easement shall be approved by the Planning and Zoning Commission.

5:3.3-5 Compliance

Failure to comply with the requirements of the conservation subdivision and group development design shall be cause for a "Stop Work" order on applicable permits. New permits or "Resume Work" orders shall not be issued until all requirements of this Ordinance are met and the required fines are paid through the courts as provided for in the Administration article of this Ordinance.

Table 3-5 SCHEDULE OF LOT AREA, YARD, SETBACK, HEIGHT, DENSITY, FLOOR AREA, AND IMPERVIOUS SURFACE REQUIREMENTS BY DISTRICT FOR RESIDENTIAL USES - CONSERVATION DESIGN

Schedule of Lot Area, Yard, Setback, Height, Density, Floor Area, and Impervious Surface Requirements by District
RESIDENTIAL USES CONSERVATION DESIGN

DISTRICT	AREA (Sq. Ft.)	STREET FRONTAGE WIDTH (FT) (B.)	SETBACKS (FT. FROM PROPERTY LINE			MAXIMIM BUILDING HEIGHT (FT.) (D.)	MAXIMUM IMPERVIOUS SURFACE RATIO	MAXIMIM DENSITY DEVELOPED AREA	MAXIMUM DENSITY ENTIRE PROJECT AREA (F.)
			FRONT	SIDE	REAR				
R-15 CD	6,000 .13acres	50	25	5	20	35	.60	7.26	2.9z
R-10 CD	6,000 .13 acre, Single-Family 8,000 .18 acre, Duplex	50	25	5	20	35	.60	10.89	4.35
RD-1 RD-2 MRD-1 CD	10,890 .25acre	50	25	25	20	35	.60	4.0	1.6

NOTES

SQ. FT. = square feet FT. = feet (NA) = Not Applicable

(A) Conservation design development requires utilization of public sewer or community onsite sewage treatment and disposal systems and public water for these areas to apply.

(B) As measured on street frontage unless on cul-de-sacs or on curbs less than ninety (90) degrees.

(C) Refer to yard and setback modification provisions of this Ordinance.

(D) Measurement from average elevation of finished grade within twenty (20) feet of the structure to the bottom of the eave. Refer to exceptions.

(E) Measured as a percent of total lot area. Impervious surface rations in conservation design (CD) projects refer only to lots located in the developable area (max 40%) of the project.

(F) Measurement in units per gross acre. Density of conservation design developments expressed in density of the maximum 40% project site developable area and the overall density of the entire project site.

Example: RD-1, RD-2, MRD-1 Conservation Design 100 acre tract maximum 40% developable land and minimum 60% in land preservation.

Density of 4 units per acre on maximum 40 acres – 4 units/acre x 40 acres = 160 Units

Density of 1.6 units per acre on entire 100 acres – 160 units ÷ 100 acres = 1.6 units per acre

5:3.4 Tree Protection

5:3.4-1 Findings and Intent

Kershaw County finds that: Trees appreciably reduce the carbon dioxide content of the air and play a vital role in air purification and the reduction of global warming, trees filter dust and other airborne pollutants from the air. Trees play a significant role in filtering and purifying stormwater passing through the ground to our drinking water aquifers. Tree root systems stabilize the soil and are an effective component of soil conservation, erosion control, and flood control. Trees provide valuable amenities to site development by providing shade, cooling the air and land, reducing noise levels and glare, and breaking the monotony of the built environment. Trees have an important aesthetic impact on the desirability of land, and consequently increase property value.

Based on these findings, it is the intent of Kershaw County to protect certain existing trees and, under the circumstances set forth in this section, to require the planting of trees to replace certain existing trees that have been removed during certain activities related to site development.

5:3.4-2 Tree Protection Definitions

Caliper - The diameter of a trunk of a nursery-grown tree or immature tree that has been grown to be transplanted in a new location, measured at six (6) inches above the top of the root mass.

Diameter at Breast Height (DBH) - The standard measure of tree diameter for trees existing in place on a site. The tree trunk is measured four and a half (4½) feet above the ground. If the tree splits into multiple trunks below four and one half (4½) feet, the trunk is measured at its most narrow point beneath the split.

Forestry Activity - Forestry activity includes, but is not limited to, timber harvest, site preparation, controlled burning, tree planting, applications of fertilizers, herbicides, pesticides, weed control, animal damage control, fire control, insect and disease control, forest road construction, and any other generally accepted forestry practices.

Forest Management Plan - Forest management plan means a document or documents prepared or approved by a forester registered in this State that defines a landowner's forest management objectives and describes specific measures to be taken to achieve those objectives. A management plan shall include silvicultural practices, objectives, and measures to achieve them, that relate to a stand or potential stand of trees that may be utilized for timber products, watershed or wildlife protection, recreational uses, or for other purposes.

5:3.4-3 Existing Significant Trees

Because any healthy pine tree of twenty (20) inches or greater diameter at breast height (DBH) and all other tree species of eight (8) inches or greater DBH is a valuable natural resource by virtue of its age, size, and its contribution to the environment, all such trees meeting this measurement shall be referred to as "significant trees" and shall be protected to the extent practical and feasible.

5:3.4-4 Unlawful to Cut, Generally

Unless authorized by the terms of this section or approved by the Planning Official, no person shall cut down, remove, damage, or destroy any significant tree located within significant tree protection zones.

5:3.4-5 Significant Tree Protection Zones

All existing significant trees located within a significant tree protection area shall be flagged and shown on the required plat, site plan, and/or phased clearing plan for a building permit, grading permit, or land

development permit. No more than the allowable percentage of significant trees located in these areas shall be felled and removed under the following regulations:

A. **Type "A" Significant Tree Protection Zone -** A fifteen (15) foot wide zone measured perpendicular to and continuing parallel to the front property line on any lot or tract where a minimum of seventy-five (75) percent of existing significant trees shall not be felled and removed. Where, owing to existing land use, lot sizes or configurations, topography, or circumstances peculiar to a given piece of property, more than twenty-five (25) percent of the significant trees to be preserved must be felled, two (2) trees measuring not less than two (2) inches caliper shall be planted for every significant tree removed in excess of twenty-five (25) percent of the total number of significant trees located in each protection area. To the extent possible, such trees shall be integrated into the required landscaping.

B. **Type "B" Significant Tree Protection Zone -** The area within the public right-of-way where no significant tree shall be removed unless prior approval is granted or approval requirements are waived by the Planning Official.

C. **Type "C" Significant Tree Protection Zone** - The area within the required side yard zoning district setback from the side property line where a minimum of fifty (50) percent of existing significant trees shall not be felled and removed. Where, owing to existing land use, lot sizes or configurations, topography, or circumstances peculiar to a given piece of property, more than fifty (50) percent of the significant trees to be preserved must be felled, two (2) trees measuring not less than two (2) inches caliper shall be planted for every significant tree removed in excess of fifty (50) percent of the total number of significant trees located in each protection area. To the extent possible, such trees shall be integrated into the required landscaping.

D. **Type "D" Significant Tree Protection Zone -** The area within the required rear yard zoning district setback from the rear property line where a minimum of fifty (50) percent of existing significant trees shall not be felled and removed. Where, owing to existing land use, lot sizes or configurations, topography, or circumstances peculiar to a given piece of property, more than fifty (50) percent of the significant trees to be preserved must be felled, two (2) trees measuring not less than two (2) inches caliper shall be planted for every significant tree removed in excess of fifty (50) percent of the total number of significant trees located in each protection area. To the extent possible, such trees shall be integrated into the required landscaping.

E. **Type "E" Significant Tree Protection Zone -** Any required buffer, open space, screening, or landscaped area. All significant trees located within these areas shall be utilized to the extent practicable to meet the tree planting requirements per the Buffering, Screening, Open Space, and Landscaping; and the Water Quality Buffer provisions of the Ordinance.

5:3.4-6 Exemption for the Removal of Existing Significant Trees

Removal of existing significant trees shall be prohibited prior to securing a grading, land development, and/or building permit. However, in the event that a tree poses a severe or imminent threat to public safety or property (e.g. in times of catastrophic events or when the tree is irreparably diseased or damaged), the Planning Official may waive the requirements of this section. Written and photographic documentation must later be submitted to the Planning Official, outlining the threat which initiated the removal. The Planning Official may require replacement of any trees which are removed where it is determined that the threat resulted from negligence.

5:3.4-7 Significant Trees Removed without Permits

A. **Significant Trees Removed in Violation of this Section** - Replacement trees shall be planted where significant trees have been removed or where removal is necessitated at any time due to acts of negligence, or where sites were cleared without a replacement schedule approved by the Planning Official. The Planning Official shall require a replacement plan to be submitted for approval. The

replacement plan shall identify the number, species, caliper, and location of replacement trees according to a general guideline of the combined caliper of replacement trees is equal to or greater than the combined DBH of the trees removed in excess of the maximum percentage allowable. If the DBH inches of the removed trees cannot be determined, replacement shall be based on the stump diameter.

B. **Significant Trees Removed Due to Emergencies or Death and Disease of Trees** - Replacement trees will not be required, as determined by the Planning Official, where significant tree removal is necessitated by emergencies or death and disease of trees due to natural causes per the above-referenced exemption. However, replacement trees are encouraged.

5:3.4-8 Tree Fund

A. **Fee in Lieu of Replacement Trees** - In cases in which the developer determines that a site cannot substantially support any or all of the required number of replacement trees, the developer may submit a request to pay a mitigation fee to a County Tree Fund in lieu of planting the trees.

B. **Demonstration of Need for Mitigation Fee Payment** - The applicant must request, in writing, the payment of a mitigation fee in lieu of planting replacement trees. This request must be accompanied by demonstration of why on-site planting of replacement trees in not feasible. Approval of the request shall not be made solely to alleviate financial hardship or an inconvenience. The applicant shall demonstrate that there are unique site conditions such as size, shape, or topographic conditions that will prevent the planting of any or all of the required replacement trees on-site.

C. **Determination of Fee** - The mitigation fee shall be based on the current nursery retail market value of the required replacement trees plus installation costs. The applicant shall submit at least two (2) written quotes from local nurseries for required replacement tree and installation costs.

D. **Action of Planning Official** - Upon a determination that a strict compliance of the tree replacement regulations would impose a particular hardship, the Planning Official shall determine the mitigation fee based on a reasonable reduction in the cost of the average of the nursery quotes submitted.

E. **Establishment of County Tree Fund** - Kershaw County shall establish a separate accounting fund in which tree mitigation fees in lieu of on-site replacement planting shall be credited. The County shall maintain and keep financial records of such accounting fund (the Tree Fund) showing the revenues and disbursements from the fund. Any yield on the Tree Fund shall accrue in the fund and be used for purposes specified. Tree Fund records shall be open to public inspection in the same manner as other County financial records.

F. **Disbursement of Tree Fund** - Tree Fund monies shall be spent only on the planting of trees on County-owned and maintained property. The applicable department head shall submit a request for funds to the County Administrator. The request for funds shall include:
   1. Type and number of trees proposed to be planted.
   2. Proposed planting location.
   3. Total cost estimates from at least two (2) local nurseries. It must be specified if costs include installation and/or delivery or if installation and/or delivery will be done by Kershaw County personnel.

   If approved, the County Administrator will issue a not to exceed amount purchase order to be paid out of the Tree Fund.

5:3.4-9 Tree and Root Protection Prior to Development

A. Before development of the property, the owner shall be responsible for the erection of any and all tree and root protection fencing necessary to protect any existing or installed vegetation from damage both during and after construction. All significant trees, as well as other vegetation such as

native species and perimeter landscaping that will be preserved during development shall be protected with a sturdy and visible fence before clearing and grading begins.

B. The location of tree protection fencing and method of construction shall be noted on the landscape plan. Tree protection fencing shall be installed and remain in place and in good condition until all development activities are completed. The tree protection fence shall be located one (1) foot from the tree trunk for each one (1) inch in tree DBH with a minimum distance of ten (10) feet required from the edge of the trunk. Tree protection fencing shall be constructed from any material substantial enough to prohibit and keep out vehicles, people, and all other activities associated with the development process. Examples include two-inch by four-inch (2"x4") wood posts and one-inch by four-inch (1"x4") wood rails, silt fencing, or orange safety fencing a minimum of four (4) feet in height on metal or wood posts.

C. No soil disturbance or compaction, stock piling of soil or other construction materials, vehicular traffic, or storage of heavy equipment is allowed in the tree and root protection area(s) of trees to be retained.

5:3.4-10 Forestry Activity

A. **Permitted Forestry Activity** - Forestry activities are permitted on all forestland parcels within unincorporated Kershaw County that are:
   1. Taxed on the basis of its present value as forestland under SC Code of Laws Section 12-43-220(d);
   2. Managed in accordance with a forest management plan that is prepared or approved by a South Carolina Registered Forester;
   3. Certified under the Sustainable Forestry Initiative, the Forest Stewardship Council, the American Forest Foundations Tree Farm System, or any other nationally recognized forest certification system;
   4. Subject to a legally binding conservation easement under which the owner limits the right to develop or subdivide the land; or
   5. Managed and harvested in accordance with the best management practices established by the State Commission of Forestry pursuant to SC Code of Laws Section 48-36-30.

B. **Time Restrictions on Issuing Permits** -Kershaw County may deny a grading permit, building permit, or land development permit for a period of either:
   1. One year after the completion of a forestry activity if the activity results in the removal of all or substantially all of the trees that were protected under Kershaw County tree protection regulations governing development from the tract of land for which the permit or approval is sought.
   2. Five years after the completion of a timber harvest if the forestry activity (timber harvest) results in the removal of all or substantially all of the trees that were protected under Kershaw County regulations governing development from the tract of land for which the permit or approval is sought and the harvest was a willful violation of County regulations.

5:3.5 Phased Clearing

5:3.5-1 Clearing Plan

After receiving sketch plan or site plan approval from the Planning Official or Planning and Zoning Commission, as appropriate, and prior to commencing site work on a land development that has been approved for the site construction phase, the applicant shall submit a clearing plan for approval. The clearing plan shall include the following:

A. **Identify the project footprint**.

1. Infrastructure:
   a. Roads and drainage.
   b. Stormwater facilities.
   c. Utilities.
   d. Other infrastructure.
2. Site improvements:
   a. Parking lots.
   b. Driveways and walkways.
   c. Building and other structures.

B. **Identify all protected areas**.
1. Natural open space.
2. Buffers, yards, and other areas required to be landscaped.
3. Shoreline buffers.
4. Stream buffers.
5. Significant tree protection zones.
6. Identify location of any streets and associated facilities, utility mains and easements, and/or greenways and pedestrian paths approved by Kershaw County to encroach upon a protected area per the provisions of this Ordinance.

C. **Identify all significant trees (20" or greater DBH pine trees, 8" or greater DBH all other species) located within**:
1. Site improvement areas.
2. Protected areas.

5:3.5-2 Site Clearing Pre-Development Phase

Once the site layout has been determined through the site analysis process and sketch plan or site plan approval has been granted, logging for marketable timber using State (SC Forestry Commission) BMPs as required by this Ordinance, may be undertaken in the project footprint area. All significant trees located within site improvement and protected areas are to be left uncut. No stump removal, grubbing, clearing, or grading shall be allowed at this time.

5:3.5-3 Infrastructure Construction Phase

Once final approval for construction has been granted, the areas to receive site infrastructure such as roads and drainage, stormwater facilities, utilities, etc. may be cleared and graded in preparation for construction. The erosion prevention and sediment control plan and tree and root protection as provided for by the Ordinance shall be followed.

5:3.5-4 Building Phase

After issuance of the building permits or individual lot building permits in the case of a subdivision, the areas to receive the principal building and accessory structures may be cleared and graded for construction. Erosion prevention and sediment control BMPs and tree and root protection during construction as provided for by this Ordinance shall be followed. Placement and location of parking lots, perimeter buffer areas, common open space areas, walkways and drives, screening, and other areas shall be designed to utilize and preserve as many significant trees as possible. Significant trees in tree protection areas shall be preserved per the Tree Protection provisions of this Ordinance.

The Planning Official, County Engineer, and Public Works Director shall prepare phased clearing guidance documents to assist the applicant in adhering to these regulations.

5:3.6 Water Quality Buffers

5:3.6-1 Basic Requirements for Water Quality Buffers

A. **Applicability** - The following water quality buffers apply to undeveloped parcels of land in existence as of the effective date of this Ordinance. Any subsequent development and/or subdivision of such parcels shall comply with the water quality buffer requirements of this section. Refer to the Lake Wateree Overlay District provisions in Article 3 of this Ordinance for special provisions pertaining to the Lake Wateree shoreline buffer requirements.

1. **Perennial Streams** - Any existing undeveloped parcel or subsequent subdivisions thereof that has any portion of its boundaries adjacent to a field verified perennial stream as displayed by solid blue lines on United States Geological Service (USGS) 7.5 quadrangle topographic maps shall incorporate a 100-foot natural buffer along the entire length of the stream's banks contained within or adjacent to the lot. The interior edge of the buffer shall duplicate the course and direction of the top of the bank of the stream. The distance of the interior edge of the buffer shall be measured horizontally, such that at any point along the interior edge, a horizontal line would be exactly 100 feet from a vertical line extending up from the top of the bank of the stream channel. Top of bank is defined as the uppermost limit of the active channel of a stream during "bank full" conditions, typically marked by a break in slope.
   a. **Exception: Perennial Streams on Individual Lots Under Three Acres** - Any existing undeveloped individual lot under three acres in size that is not part of a larger common development that has any portion of its boundaries adjacent to a field verified perennial stream as displayed by solid blue lines on United States Geological Service (USGS) 7.5 quadrangle topographic maps shall incorporate a fifty (50) foot natural buffer along the entire length of the stream's banks contained within or adjacent to the lot. The interior edge of the buffer shall duplicate the course and direction of the top of the bank of the stream. The distance of the interior edge of the buffer shall be measured horizontally, such that at any point along the interior edge, a horizontal line would be exactly fifty (50) feet from a vertical line extending up from the top of the bank of the stream channel. Top of bank is defined as the uppermost limit of the active channel of a stream during "bank full" conditions, typically marked by a break in slope.
2. **Intermittent Streams** - Any existing undeveloped parcel or subsequent subdivisions thereof that has any portion of its boundaries adjacent to a field verified intermittent stream as displayed by dashed blue lines on United States Geological Service (USGS) 7.5 quadrangle topographic maps shall incorporate a fifty (50) foot natural buffer along the entire length of the stream's banks contained within or adjacent to the lot. The interior edge of the buffer shall duplicate the course and direction of the top of the bank of the stream. The distance of the interior edge of the buffer shall be measured horizontally, such that at any point along the interior edge, a horizontal line would be exactly fifty (50) feet from a vertical line extending up from the top of the bank of the stream channel. Top of bank is defined as the uppermost limit of the active channel of a stream during "bank full" conditions, typically marked by a break in slope.
   a. **Exception: Intermittent Streams on Individual Lots Under Three Acres** - Any existing undeveloped individual lot under three acres in size that is not part of a larger common development that has any portion of its boundaries adjacent to a field verified intermittent stream as displayed by dashed blue lines on United States Geological Service (USGS) 7.5 quadrangle topographic maps shall incorporate a twenty-five (25) foot natural buffer along the entire length of the stream's banks contained within or adjacent to the lot. The interior edge of the buffer shall duplicate the course and direction of the top of the bank of the

stream. The distance of the interior edge of the buffer shall be measured horizontally, such that at any point along the interior edge, a horizontal line would be exactly twenty-five (25) feet from a vertical line extending up from the top of the bank of the stream channel. Top of bank is defined as the uppermost limit of the active channel of a stream during "bank full" conditions, typically marked by a break in slope.

3. **Shoreline Buffers** - Any existing undeveloped parcel or subsequent subdivisions thereof that has any portion of its boundaries adjacent to lakes and ponds with hydraulic connectivity to field verified perennial streams (stream leading into and out of pond/lake), shall have a fifty (50) foot buffer perpendicular to the shoreline as defined by the 100-year high water elevation. The distance of the interior edge of the buffer shall be measured horizontally, such that at any point along the interior edge, a horizontal line would be exactly fifty (50) feet from a vertical line extending up from the shoreline. Refer to the Lake Wateree Overlay District provisions in Article 3 of this Ordinance for special provisions pertaining to the Lake Wateree shoreline buffer requirements.
   a. **Exception: Shoreline Buffers on Individual Lots Under Three Acres** - Any existing undeveloped individual lot not part of a larger common development under three acres in size that has any portion of its boundaries adjacent to lakes and ponds with hydraulic connectivity to field verified perennial streams (stream leading into and out of pond/lake) shall have a twenty-five (25) foot buffer perpendicular to the shoreline as defined by the 100-year high water elevation. This exception does not apply to individual lots on Lake Wateree.
4. **Floodways and Wetlands Associated with Perennial and Intermittent Streams** - In areas where a floodway profile has been delineated along a perennial or intermittent stream on the FEMA Flood Map of Kershaw County, the stream buffer shall be the width of the floodway if the floodway is greater than the required buffer width. In areas where wetlands have been delineated by the U.S. Army Corps of Engineers along perennial or intermittent streams, the stream buffer shall be the delineated width of the wetlands if the wetlands are greater than the required buffer width.

B. **Exception to Required Buffer Width** – A study supporting an exception to the required buffer width may be submitted to the Planning and Zoning Commission for consideration providing that the study is conducted by a qualified Professional Engineer that includes the following factors:
1. The slope of the site from the highest elevation on the site to the surface elevation of the stream, lake, or pond.
2. Annual rainfall.
3. Site soil type.
4. Type of vegetation within the buffer.
5. Amount of impervious surfaces on-site (including rooftops).
6. Stream type.
7. Existing water quality.
8. Extent of development of the watershed.
9. Use of existent or proposed stormwater BMPs in conjunction with the buffer.
10. Other characteristics specific to the site and/or the watershed.

The study shall demonstrate that a proposed buffer width that is less than the required width can be established without sacrificing water quality protection as gauged by the following standards:
a. Erosion prevention and sediment control.
b. Nutrient, pesticide, and biocontaminant (fecal coliform) removal.
c. Stream temperature.

Under no circumstances shall an exception be allowed that will result in a reduction of more than forty (40) percent of the required buffer width.

5:3.6-2 Disturbance of Buffers

Installation of any new structures (including structure replacements), disturbance of the existing terrain, or removal of existing vegetation within the water quality buffer is prohibited except as provided herein. The installation of septic systems or any portion thereof is prohibited within water quality buffers. Repair to existing septic tanks is allowed providing repairs are conducted per the Protection of Water Quality Buffers During Site Development and Construction Activity provisions of this section. This prohibition includes any disturbance or removal of topsoil, trees, and other natural growth located in the buffers, for any purpose, subject to the express, limited exceptions listed below:

A. **General Exceptions -** The following exceptions are permitted within the buffers established herein without a permit, but only upon strict observance and compliance with the provisions stated below:
   1. **Tree Removal**
      a. Within the buffer, trees less than four (4) inches DBH may be removed, provided it is done using only manual labor and hand or chain saws, and not mechanical equipment.
      b. Additionally, any trees that are dead or have become diseased or damaged through natural processes may be removed in the same manner.
      c. No motorized vehicles or construction equipment other than chain saws or similar hand-operated machines are permitted within the buffer except as specifically provided in these regulations.
   2. **Underbrush Removal**
      a. Underbrush (defined as nuisance bushes, vines, and similar rank plant growth beneath the tree canopy) may be removed within the buffer, provided that such work is performed manually and without the use of vehicular or mechanical equipment or chemical applications.
      b. This activity may also include removal of any natural or man-made debris lying on or near the floor of the buffer.
   3. **Pruning and Trimming**
      a. Pruning and trimming of trees within the buffer is permitted, provided that pruning shall be limited to tree branches beginning at the ground and extending up the tree trunk no more than one half of the total height of the tree.
      b. Trimming or pruning may also be performed on any limbs or branches that are diseased or naturally damaged.
      c. No topping of trees is permitted within the buffer.
   4. **Emergency Operations -** Activities associated with emergency operations such as hazardous materials removal, flood or fire control, evacuations, and storm damage clean up are exempt from these requirements. However, any such activity must be authorized by an appropriate government agency or conducted in accordance with prior emergency management regulations.

B. **Exceptions Requiring a Permit -** The following exceptions are permitted within required water quality buffers only after submission of an application for and issuance of a written permit or approval by the Planning Official:
   1. **View Corridors -** Applications for view corridors will be considered only for the Wateree and Lynches Rivers, the larger navigable streams of Kershaw County, other streams with public access, and on lakes and ponds with public access and/or multiple shoreline ownership under the following conditions:
      a. Tree removal within stream buffers to allow for view corridors is allowed; provided that such removal shall not exceed fifteen (15) feet in width, and shall not constitute an area greater than one-fifth of the total buffer area required on each lot; or

b. Alternatively, trees may be removed randomly for the purpose of improving the views of streams, provided that an amount not greater than one-tenth of the total DBH of all trees located in the buffer area of each lot is removed.
c. Any tree removal shall be manually performed using hand or chain saws, and no other disturbance of the natural terrain is permitted.
d. Any view corridor or open area created through the utilization of this provision shall be stabilized and improved with shrubs, low-growing trees, or other natural groundcover plantings.

2. **Access Corridors**
   a. **Tree Removal** - Tree removal within buffers is allowed in order to:
      1.) Provide a limited access corridor to the stream.
      2.) Install shoreline stabilization and water-dependent structures.
      3.) Remove large debris or previously existing nonconforming structures.
      4.) Install paths, boardwalks, or stairs to access water-dependent structures.
   b. **Standards**
      1.) This access corridor shall not exceed fifteen (15) feet in width and shall not constitute an area greater than one-fifth of the total buffer area required for each lot.
      2.) Vehicular equipment may be operated in an approved access corridor; provided that, to the furthest extent practicable, the equipment utilizes rubberized mini-track systems, and the natural terrain is disturbed only to the extent required to safely operate such equipment.
      3.) After such disturbance, the resulting terrain shall be stabilized and revegetated with shrubs, low-growing trees, and other natural groundcover plantings that closely match the existing terrain on either side of the access corridor.
      4.) When the access corridor provided in this section is used for the installation of paths, boardwalks, or stairs leading to the stream, such structures shall not exceed six (6) feet in width.
3. **Separation Between Corridors** - Applications for multiple view and access corridors will be considered under the following conditions:
   a. There shall be a minimum of 100 linear feet of buffer between corridors.
   b. The combined area of all corridors cannot exceed twenty-five (25) percent of the total buffer area of each lot.
4. **Stream Bank Stabilization** - Buffers along the stream may be adjusted to accommodate stream bank stabilization, provided that all stabilization work is performed as follows:
   a. In general, shoreline stabilization shall not extend above a height of five (5) feet above the normal stream elevation level.
   b. When the stream bank of the property adjacent to stream is equal to or less than a height of five (5) feet, stream bank stabilization may be allowed to encroach into the buffer; provided, however, that when the bank exceeds a height of five (5) feet, additional stabilization may be required.
      1.) When additional stabilization is required, to the extent authorized by a permit, the bank of the stream may be graded at an acceptable slope back toward the interior of the lot, and the slope shall be stabilized with vegetative plantings or terraced retaining walls.
      2.) When such work is permitted and such grading is employed, the interior edge of the buffer must be adjusted inward by the same distance that the stabilization activity extends from the normal stream elevation level into the original buffer.

3.) The length of such adjustment shall be equal to the length of a horizontal line extending from the interior edge of the stabilization to a vertical line extending from the top edge of the stream bank at normal stream elevation level.

5. **Stream Crossings and Utilities Easements -** Existing easements for public and private utility facilities, including transmission or conveyance lines, communication, sewer, water or gas lines, and erosion control or stormwater structures shall be exempt, provided that any land disturbance is conducted in compliance with the applicable land disturbance regulations and is restored as soon as possible. New proposed stream crossings and utility easements may be permitted provided:
   a. An analysis is submitted to the Planning Official demonstrating that no economically feasible alternative is available.
   b. The right-of-way shall be the minimum width needed to allow for maintenance access to the installation.
   c. The angle of crossing shall be as close to perpendicular to the stream or buffer as feasible in order to minimize clearing requirements.
   d. The minimum number of crossings should be used within each development, and no more than one (1) crossing is allowed for every 1,000 linear feet of buffer zone unless no feasible alternative can be demonstrated. Where feasible, the design of roadways and lots within a development should be aligned such that all streams are either to the rear or the side of individual lots.
   e. Roadways, where permitted through the required buffers, including clearing and grading required for their construction, shall be built in accordance with the street standards of this Ordinance for the property location, and dedicated for public use after completion. The dedication of such facilities to a homeowners' association that is legally chartered and registered with the SC Secretary of State shall be considered a public use for the purposes of this provision.
   f. Non-bisecting utility easements running perpendicular to a stream are allowed, and where feasible, shall be installed a minimum of twenty-five (25) feet from the top of bank on perennial streams and a minimum of fifteen (15) feet from the top of bank of intermittent streams and shorelines.
   g. Installation procedures for an approved utility easement buffer crossing or the installation of an approved utility easement within a segment of a buffer shall be conducted as follows:
      1.) A double row of silt fence (with metal posts and wire backing) or other sediment/erosion control device approved by the Stormwater Manager shall be installed along the area of disturbance prior to commencement of work.
      2.) Disturbed areas shall be seeded and mulched at the end of each workday.
      3.) Standard BMPs for work in live waterways shall be implemented.
      4.) All other applicable stormwater regulation requirements must be adhered to.
6. **Stream Re-Location -** Land disturbing activities for construction in, on, or under a stream, lake/pond, or other natural watercourse shall be planned and conducted to minimize the extent and duration of disturbance of the stream channel or lake/pond bed. Any proposed relocation of a stream must be demonstrated as an essential part of the proposed activity and that no practicable alternative is available. Pre-approval by the County must be granted prior to obtaining all other applicable Federal and State permits. Notwithstanding Federal and/or State permit requirements, the relocation shall be planned and executed to the extent practicable to minimize changes in the stream flow characteristics.

7. **Exceptions for Public Recreational Facilities**
   a. **Purpose -** The value of a stream or lake as a recreational resource is dependent upon the protection of its water quality. Because public recreational facilities such as swimming beaches, boat ramps, trails, picnic areas, bank fishing areas, and fishing docks require direct shoreline access and/or viewsheds, the following exceptions to the disturbance of buffers at such facilities are provided.
      1.) **Modification of Buffer Boundaries -** Activity areas of public recreational facilities that are strictly water and shoreline dependant (swimming beaches, boat launches, and bank fishing areas) may have the exterior (lakeside) boundary of the required buffer adjusted to follow the proposed perimeter of the activity area. In such cases, the distance of the interior edge of the buffer shall be measured horizontally, such that at any point along the interior edge, a horizontal line would be the exact required buffer width from a vertical line extending up from the perimeter of the activity area.
      2.) **Location of Facilities -** Public recreational facilities that are not water dependant (parking lots, bath houses, club houses, picnic shelters, etc.) shall be located behind the interior buffer boundaries.
      3.) **Access and View Corridors at Public Recreational Facilities**
         a.) **Access Corridors -** Corridors through the buffer shall be permitted to allow pedestrian access to water dependant shoreline activity areas. The number of access corridors shall be limited to those needed to provide adequate access between the activity areas and recreational facilities. Access corridors shall also be permitted to provide vehicular access to boat launches.
         b.) **View Corridors -** Water views are an important factor in the recreational experience for non-water dependant activities such as picnicking and walking. Recreational facilities master plans shall consider the placement of facilities desiring viewsheds and the design of the viewshed to accommodate the water view without diminishing the water quality functionality of the buffer.
         c.) **Trails** – Walking, hiking, and bicycle trails shall where feasible, be installed a minimum of twenty-five (25) feet from the top of bank on perennial streams and a minimum of fifteen (15) feet from the top of bank of intermittent streams and shorelines. Such trails shall not exceed six (6) feet in width.
      4.) **Stormwater Management -** The public recreational facility master plan shall incorporate the following stormwater best management practices and stormwater pollution prevention measures:
         a.) Access corridors and trails shall be designed such that there is positive drainage of the corridors into the buffer area and such that the corridors and trails do not function as a conduit for direct stormwater discharge into the lake/pond/stream. Corridor and trail drainage shall be designed to promote sheet flow to minimize channelization of runoff.
         b.) Land development shall be planned in harmony with the natural runoff pattern and along the contours.
         c.) Impervious surfaces shall be limited. Surface drainage shall be designed to promote sheet flow to minimize channelization of runoff.
         d.) Chemicals such as fertilizers, pesticides, and herbicides shall be applied at appropriate rates and shall not be applied within 100 feet of unprotected shorelines.
         e.) All trash receptacles shall be firmly secured from animal and weather disturbances and contact with stormwater.

5.) **Review and Approval of Public Recreational Facility Master Plans** - The recreational facility master plans shall be included in the group development submittal and review and shall be approved by the Planning and Zoning Commission per the submittal requirements and approval process provisions of this Ordinance.

C. **Approval Procedures for Permitted Activity**

1. Except as permitted under General Exceptions provisions section of this Article, no shoreline stabilization, tree removal, or land disturbance activity of any kind, including those permitted under the Exceptions Requiring a Permit provisions, shall be conducted in the buffer without a written permit or approval for such activity issued by the Kershaw County Planning and Zoning Department. The Planning Official shall submit the permit request to the Stormwater Manager and shall obtain the Manager's written approval prior to issuing the permit. In order to apply for approval, the parcel owner must supply the Planning and Zoning Department with three (3) copies of a survey prepared by a South Carolina-Registered Land Surveyor showing the following:
   a. The extent of any stream or shoreline buffer on the subject property shown by metes and bounds.
   b. The labeling of the stream and shoreline buffer.
   c. The location of any previously existing nonconforming structures located within the buffer.
   d. The location and size of any existing tree, four (4) inches DBH or greater, located in the buffer.
   e. The location of the proposed activities for which approval is being requested.
2. The approval request shall be submitted in writing and shall include a detailed description of the permitted activity with any required supporting information needed to establish that the requested activity meets the requirements of this section. Requests with incomplete information to support the proposed activity will not be considered. Survey flagging shall clearly indicate the following:
   a. The location of the lake/pond shoreline and/or stream top of bank.
   b. The interior edge of the buffers.
   c. All trees four (4) inches DBH or greater.
   d. All trees proposed to be removed.
   e. All areas proposed to be disturbed on the subject property.

D. **Water Quality Buffer Plat Requirements** - Water quality buffers, where required by these regulations, shall be shown on all land development application site plans and on all final plats prepared for recording. When a subdivision of a property is proposed, the water quality buffer plats must be prepared and approved for the entire parcel prior to approval of the subdivision. The water quality buffer plat shall address the following items:

1. The extent of any stream or shoreline buffer shall be shown on the subject property by metes and bounds.
2. The stream and shoreline buffer shall be labeled.
3. A note shall be provided to reference all buffers stating: "There shall be no clearing, grading, construction, or disturbance of vegetation except as permitted by the Kershaw County Planning Official."
4. A note shall be provided to reference any protective covenants governing all buffer areas stating: "Any buffer shown on the plat is subject of protective covenants which may be found in the land records and which restrict disturbance and use of these areas."
5. If a study supporting an exception to the required buffer width has been approved, a note must be provided stating, "Exception to required buffer width approved _____ (date)."

6. If the buffer area will not be part of an individual lot, then ownership must be stated by identifying who is the responsible party.

E. **Enhancement of Buffers -** In areas in which the natural buffer has been disturbed or compromised, the buffer may be enhanced with additional plantings. When landscaping within the buffer is conducted as a means of enhancing the natural buffer, it shall be performed manually and without the use of vehicular or mechanical equipment to the greatest extent practicable, and stringent erosion prevention and sediment controls shall be utilized to protect the stream from siltation as a result of landscaping activities. Planting of native and adaptive species is encouraged. The planting of invasive species is not allowed. A list of native and adaptive species is available from the Planning and Zoning Department.

Enhancement, restoration, and/or reestablishment of water quality buffers on land developed prior to the effective date of this Ordinance are strongly encouraged. For redevelopment projects on such parcels that will require a building and/or land development permit, water quality buffers are a preferred best management practice for erosion prevention, sediment control, and stormwater management. The Kershaw County Stormwater Manager may require the enhancement, restoration, and/or reestablishment of water quality buffers on any parcel of land, structure, or activity which is causing or contributing to pollution, including non-point pollution of the waters of Kershaw County; erosion or sedimentation of stream channels; and/or degradation of aquatic or riparian habitat.

F. **Protection of Water Quality Buffers During Site Development and Construction Activity -** A water quality buffer plan ensuring the following safeguards shall be included in all required erosion prevention and sediment control plans, as applicable:

1. Water quality buffers must be clearly identified on all stormwater management plans and construction drawings and must be marked with the statement "Water Quality Buffer. Do Not Disturb."
2. Water quality buffers cannot be encroached upon or disturbed during project construction, unless in accordance the General Exceptions and the Exceptions Requiring a Permit provisions of this section or unless they are being established, restored, or enhanced in accordance with an approved buffer enhancement plan.
3. Water quality buffers must be clearly marked with a warning barrier before construction activities begin. The marking shall be maintained until completion of construction activities. All contractors and others working on the construction site must be made aware of the existence of the buffer(s) and the restrictions on disturbing the buffer(s).
4. All areas of the water quality buffer, including stream banks, must be left in their existing condition upon completion of construction activities. Should construction activities associated with development cause degradation to stream banks, all eroding, bare, or unstable stream banks shall be restored to existing conditions.
5. If any trees are allowed to be removed, tree location shall be shown and a note shall be provided stating that the tree must be hand cleared.
6. The locations of all signage must be clearly shown on plans.
7. A narrative stating the extent of the buffer areas, including any allowed disturbance in the buffer areas, must be included with the plans.
8. A double row of silt fence (with metal posts and wire backing) or other sediment/erosion control device approved by the Stormwater Manager shall be shown between the project boundary and the interior side of the applicable buffer area(s).
9. The water quality buffer shall be shown and labeled on all land development application site plans and on all final plats prepared for recording.

5:3.7 Stormwater Management Standards

5:3.7-1 Definitions

Best Management Practices (BMPs) - Schedules of activities, prohibitions of practices, maintenance procedures, and other management practices, as well as structural controls to prevent or reduce the pollution of waters of the United States. BMPs also include treatment requirements, operating procedures, and practices to prevent erosion, control runoff, spillage or leaks, sludge or waste disposal, or drainage from raw material storage.

Forebay - A forebay is a small pool or basin (typically about ten percent of the volume of the main pond area) that is placed upstream of the main pond area and below the inlets into the pond. The forebay is separated from the main pond area by barriers or baffles that may be constructed of earth, stones, rip-rap, gabions, or geotextiles. A forebay is designed to trap coarse particles that would otherwise accumulate in the main pond area. By catching the coarse particles, routine maintenance is then typically performed on the much smaller forebay, thereby greatly reducing the need to dredge the main pond. Depending on the number and location of the inlets into the pond, either one larger or several smaller forebays may be required. Also referred to as a sediment forebay.

Low Impact Development (LID) - A stormwater management and land development strategy applied at the parcel and subdivision scale that emphasizes conservation and use of on-site natural features integrated with engineered, small-scale hydrologic controls to more closely mimic pre-development hydrology. LID focuses on how water enters a site, is stored on-site, is used on-site, and leaves a site. Land development that incorporates LID practices minimizes impervious surface, protects and enhances native vegetation and soils, and manages stormwater at its source. The goal of LID is to prevent measurable harm to streams, lakes, wetlands, and other natural aquatic systems from commercial, residential, or industrial development sites while also promoting beneficial use (or reuse) of naturally occurring water on the development sites.

Municipal Separate Storm Sewer System (MS4) - Conveyance or system of conveyances (including roads with drainage systems, municipal streets, catch basins, curbs, gutters, ditches, man-made channels, or storm drains) which is owned or operated by a State, city, town, borough, county, parish, district, association, or other public body and is designed or used for collecting or conveying stormwater, which is not a combined sewer and is not part of a Publicly Owned Treatment Works (POTW). The term *MS4* typically refers to that public body whose conveyance system is further regulated by the National Pollution Discharge Elimination System (NPDES) as defined in the *Clean Water Act* and associated State NPDES General Permits for Storm Water Discharges.

Pond, Detention - A detention pond provides temporary storage of stormwater (e.g., twenty-four hours) to allow particles and associated pollutants to settle and has an outlet structure that allows the stormwater runoff to be discharged at or below the predevelopment runoff rate. Detention ponds do not have a permanent pool and are designed to drain completely dry after some minimum time (e.g., 72 hours). If the twenty-four hour, 100-year volume is exceeded either due to larger or consecutive storm events, the pond is designed to release the excess water via an emergency spillway. Also referred to as a dry pond, dry detention pond, extended detention pond, or extended detention basin.

Pond, Retention - A retention pond is a detention pond or shallow basin that is designed to impound stormwater runoff from up to a twenty-four hour, 100-year storm event and infiltrate the stormwater into the soil. Retention ponds do not have a permanent pool and are designed to drain completely dry after some minimum time (e.g., 72 hours). If the twenty-four hour, 100-year volume is exceeded either due to larger storm events, consecutive storm events, or changes in infiltration rates, the pond is designed to

release the excess water via an emergency spillway. Also referred to as an infiltration basin or retention basin.

Pond, Wet - Wet ponds are detention ponds that are constructed to have a permanent pool of water throughout the year. Wet ponds treat incoming stormwater runoff by allowing particles and associated pollutants to settle, while biological activity takes up nutrients. During any given storm event, stormwater runoff enters the pond and replaces the "treated" water in the permanent pool that has been detained from the previous storm event. Like a dry detention pond, a wet pond also provides temporary storage of stormwater runoff from up to a twenty-four hour, 100-year storm event and has an outlet structure that allows the stormwater runoff to be discharged at or below the predevelopment runoff rate. In addition, if the twenty-four hour, 100-year volume is exceeded either due to larger or consecutive storm events, the pond is designed to release the excess water via an emergency spillway. Also referred to as a permanent pool detention pond, stormwater pond, wet detention pond, or wet extended detention pond.

5:3.7-2 General Storm Draining Design

A. **National Resources Conservation Service (NRCS) Methodology** - Kershaw County prefers the NRCS, formally the Soil Conservation Service (SCS), methodology for determining runoff and designing storm drainage systems. The Rational Methodology or any other reputable, established method may be used for determining peak flows, and sizing drainage channels and piping systems. In all calculations, coefficients should be consistent with other guidance in the standards specified herein. Kershaw County utilizes the NRCS Method to verify drainage calculations, and any significant discrepancy in quantities shall be resolved before construction is approved.

B. **No Negative Impact** - In areas where there are known drainage problems, no construction shall be allowed which will have an adverse impact on the peak runoff rate, timing, and/or volume until it is reasonably established that no negative impact will result.

C. **Required Storage and Release** - A combination of storage and regulated release of stormwater runoff shall be required for all developments located in areas where there are inadequate receiving systems, manmade or natural, to accommodate the projected runoff.

D. **Peak Release Rate** - The peak release rate of stormwater from any development utilizing detention ponds shall not exceed the stormwater runoff rate from the area in its pre-developed state for the design storm. The carrying capacity of the systems immediately downstream shall also be considered in determining the allowable release rate. In watersheds with recognized drainage problems, the allowable release rate and volume may be limited to less than the pre-developed rates.

E. **Wetlands Preservation and Conservation** - Kershaw County upholds the preservation and conservation of wetlands as a means of reducing adverse impacts from pollution, storm drainage, and sedimentation. Any proposed development involving delineated wetlands shall comply with all Federal, State, and local laws and regulations.

F. **Design Consistency** - Stormwater drainage systems shall be designed for consistency with general concerns and values of the Kershaw County standards addressed herein, the Kershaw County Stormwater Management Ordinance (SWMO), as well as other Federal, State, and local laws and regulations. Kershaw County encourages the use of Low Impact Development (LID) practices, but reserves the right to review all applicable data, calculations, details plans, specifications, etc. associated with a particular plan or practice. All factors shall be taken into consideration including, but not limited to: Environmental benefits, maintenance costs, location, aesthetics, impacts on other property owners, etc. The County Engineer may grant variances to the standards which would otherwise be an impediment to implementing a LID stormwater management plan or practice that is determined to be potentially beneficial to Kershaw County. In making a determination of a variance,

the County Engineer shall consult with the Public Works Director, Planning and Zoning Director, and/or other departments involved with the subject project.

5:3.7-3 Design Features

A. **Internal Drainage** - The internal storm drainage system shall be designed to accommodate the design storm. The roadway drainage system (pavement, curb, gutter, and/or any associated convenience system) shall be designed to accommodate a storm with a ten (10) year return frequency.

B. **External Drainage** - Any off-site stormwater runoff onto the proposed development shall be accommodated. Design parameters and coefficients used in all calculations for off-site stormwater shall be based on the projected build out of the basin. The design storm shall be dictated by these standards with due consideration given to the downstream system capacity.

C. **Building/Structure Drainage** - Where practicable, drainage from rooftops of existing or proposed buildings and/or structures should be directed across pervious areas and should not be piped directly to the storm drainage system. When this is not practical, piping rooftop runoff away from the building or structure and discharging to an on-site pervious area is acceptable. All other exceptions, including piping to off-site pervious areas to which legal easements are obtained, shall be reviewed on a case-by-case basis.

5:3.7-4 Design Storm Standards

A. **Minor Drainage Systems: 0 - <40 Acres** - All street drainage, curb and gutters, pipe systems, culverts, ditches, and channels which drain less than forty (40) acres shall be designed to accommodate flows resulting from a ten (10) year frequency storm. Minimum allowable pipe diameter shall be eighteen (18) inches. A drainage area map shall be supplied delineating all drainage areas.

B. **Intermediate Drainage Systems: 40 - <100 Acres** - All drainage systems draining at least forty (40) acres but less than 100 acres shall be designed to accommodate flows resulting from a twenty-five (25) year frequency storm. A drainage area map shall be supplied delineating all drainage areas.

C. **Major Drainage Systems: 100 - <300 Acres** - All drainage systems draining at least 100 acres but less than 300 acres shall be designed to accommodate flows resulting from a fifty (50) year frequency storm. Encroachment upon a major drainage channel and the adjacent overland flow is discouraged and shall be avoided as much as practicable. An easement shall be provided that is sufficient to accommodate the design flow. A drainage area map shall be supplied delineating all drainage areas.

D. **County or FEMA Flood Plains: 300 Acres or More** - All natural channels, creeks, or rivers which drain 300 acres or more, are classified as flood areas and shall be avoided as much as practicable. All unavoidable improvements such as culverts or bridges along these channels shall be designed to accommodate flows resulting from a 100-year frequency storm. An easement shall be provided that is sufficient to accommodate the design flow. A drainage area map shall be supplied delineating all drainage areas.

E. **Flood Prevention** - All drainage systems, regardless of size or classification, shall be analyzed and revised as necessary to ensure that overflow of the system does not result in the likelihood of dwelling flooding, property damage, public access flooding, and/or interruption of utilities during a 100-year frequency storm event. All computations shall be based on the contributing basin being fully developed and shall be in compliance with the Kershaw County Flood Damage Prevention Ordinance.

5:3.7-5 Storm Drainage Calculations

A. **Hydrologic Calculations** - All hydrologic calculations shall be conducted using a volume based hydrograph method acceptable to the Public Works Director and/or County Engineer. The design storm shall be based on the applicable National Resources Conservation Service (NRCS) twenty-four (24) hour rainfall distribution with a five (5) minute burst duration time increment. The Rational or Modified Rational Method may be utilized for sizing individual culverts that are not part of a pipe system and does not have a contributing drainage area greater than twenty (20) acres. The storm duration for the Rational or Modified Rational Method shall be equal to the time of concentration of the contributing drainage area or a minimum of five (5) minutes, whichever is greater.

B. **Consideration of Entire Project** - Stormwater management requirements for a specific project shall be based on the entire project being developed. If the project is phased, the initial submittal shall control the area proposed in the initial phase and establish a procedure and obligation for the total site control.

C. **Stormwater Quality Control** - Stormwater quantity control is an integral part of overall stormwater management. In areas where there are known drainage problems or where the downstream channels, natural or manmade, are inadequate to accommodate the projected runoff, detention and/or retention ponds may be required to control the peak discharge rate and/or volume. The requirements for detention ponds, retention ponds, and/or downstream improvements shall be established by the Public Works Director and/or County Engineer. Kershaw County advocates the use of existing natural channels in their natural state, discourages practices that encroach into natural flood prone areas, and shall consider channel improvements and/or ponds as a last option.

D. **Discharge Velocities** - Discharge velocities shall be reduced to provide a non-erosive velocity flow (2.5 fps in sand soils, 5 fps in clay soils) from all structures. In channels, the velocity shall be equal to or less than the velocity of the ten (10) year, twenty-four (24) hour storm discharge in the receiving waterway prior to the land disturbance.

E. **Ponds** - All ponds that are not engineered as part of a stormwater management system that impede, encroach, or alter a major drainage channel or flood prone area shall be capable of accommodating stormwater from a 100-year storm event based on fully developed conditions in the watershed.

F. **Wetlands** - Where delineated wetlands are intended as a component of an overall stormwater management system, approval shall not be granted until all necessary Federal and State permits have been obtained.

G. **Vector Control** - All stormwater management and sediment control practices shall be designed, constructed, and maintained with consideration for the proper control of mosquitoes and other vectors.

H. **Drainage Calculations** - A complete set of drainage calculations is required with each engineering plan submittal. For more information on submittal requirements, refer to the applicable sections of this Article. If the site is located in an area that does not have an adequate downstream system, calculations shall be provided for pre-developed and post-developed conditions on the site. Based on the pre-developed and post-developed calculations, the increase in stormwater runoff can be determined. This increase should be handled in one of the following manners: detention and/or retention ponds as required, approvable downstream drainage improvements, and/or the obtainment of a stormwater discharge easement from an adjacent property owner whose land has the capacity to accommodate the projected runoff.

   1. **Land Use Descriptions** - Land use descriptions for pre-developed conditions shall be based on the 2007 aerial photography on record with the Kershaw County Assessor's Office. Any exceptions to the apparent land use indicated in the aerial photography shall be reviewed on a

case-by-case basis. The Public Works Director/County Engineer may revise the reference year for the aerial photography as deemed necessary.

2. **NRCS Urban Hydrology for Small Watersheds** - A complete set of instructions, sample calculations, and formats are provided in the NRCS *Urban Hydrology for Small Watersheds Technical Release Number 55* (TR-55). Use of these standard formats will expedite the engineering review process. If a different format is utilized, the following information, as a minimum, shall be provided for each drainage area to support the calculations:
   a. Size (in acres).
   b. Hydraulic Length (in feet).
   c. Average Slope (in percent).
   d. Curve Number (CN).
   e. Peak Rate Factor (PRF) - Shall provide calculations to support if different from 484.
   f. 24-Hour Rainfall Factor - Refer to IDF chart for project area.
3. **Calculation Software** - There are various acceptable storm drainage software programs available based on the NRCS Method. If a computer program is utilized, adequate information as listed above is required. A summary report of the data used which provides key values/factors/coefficients and output data used in sizing each part of the drainage system is also required.
4. **Rational Method** - In cases where the Rational Method is utilized, the drainage calculations and factors shall be arranged in a logical and systematic fashion so that the calculations for the entire development are easy to follow, and the contribution of each and every segment of the system is able to be isolated. As a minimum, the following information shall be provided for each area/sub-area:
   a. Size (in acres).
   b. Percent of area which is impervious.
   c. Hydraulic Length.
   d. Average Slope (in percent).
   e. Time of Concentration.
   f. Rainfall Intensity.

   Note: Failure to provide the minimum required data will result in an increased review time, disapproval of the submittal, and/or delay of the review process until additional information is provided. Refer to Table 5-11 on the following page:

Table 5-7 RANGES OF RATIONAL METHOD RUNOFF COEFFICIENTS ("C")	
Description of Area	**"C" Value**
Business:	
Downtown Areas	0.70-0.95
Neighborhood Areas	0.50-0.70
Residential:	
Single-Family Areas	0.30-0.50
Multi-Family Areas	0.40-0.75
Apartment	0.50-0.70
Industrial:	
Light Development	0.50-0.80
Heavy Development	0.60-0.90
Parks, Cemeteries	0.10-0.25
Unimproved Areas	0.10-0.30
Playground Areas	0.20-0.35
Character of Surface	**"C" Value**
Paved Streets and Areas	0.70-0.95
Drives and Walks	0.70-0.95
Roofs	0.75-0.95
Source: Design and Construction of Sanitary and Storm Sewers, American Society of Civil Engineers and the Water Pollution Control Federation, 1969.	

5. **Minimal Acceptable "C" Values** - The minimum acceptable values in Kershaw County are 0.25 for undeveloped sandy soils, 0.40 for undeveloped clay soils, 0.35 for residential in sandy soils, and 0.55 for residential in clay soils. For impervious surfaces, a minimum "C" value of 0.90 shall be used.
6. **Time of Concentration** - The time of concentration should be calculated using an acceptable method or formula such as the Upland Method or other accepted methodology. Once the time of concentration is known, the corresponding rainfall intensity can be determined using the following table:

Table 5-8 RAINFALL INTENSITY FOR KERSHAW COUNTY						
Time of Concentration (minutes)	**Frequency/Recurrence Intervals (years)**					
	2	**5**	**10**	**25**	**50**	**100**
5	5.39	6.32	7.04	8.09	8.94	9.79
10	4.77	5.57	6.18	7.07	7.79	8.49
15	4.28	4.98	5.51	6.28	6.90	7.50
20	3.88	4.50	4.97	5.65	6.20	6.72
30	3.27	3.77	4.16	4.71	5.14	5.56
40	2.82	3.25	3.57	4.03	4.40	4.75
50	2.48	2.85	3.13	3.53	3.84	4.15
60	2.21	2.54	2.78	3.14	3.41	3.68
90	1.66	1.91	2.09	2.35	2.56	2.75
120	1.33	1.53	1.67	1.88	2.04	2.20
Source: Rainfall intensities calculated using rainfall intensity values provided by SC Department of Transportation for Camden, SC.						

5:3.7-6 System Capacity

The capacity of closed storm drainage systems, open channels, culverts, and bridges shall be determined in accordance with accepted engineering practices. The Manning equation is the most commonly used method. Values for the Manning's roughness coefficient (n) can be found in various standard hydraulic

texts. Values most frequently used in Kershaw County are 0.013 for reinforced concrete pipe (RCP), 0.024 for corrugated metal pipe (CMP), and 0.011 for PVC pipe. Values for open channels shall be selected from acceptable values as shown in a classic text such as *Open Channel Hydraulics* by Chow.

Any factor having a significant impact shall be considered. In the case of culverts, inlet and outlet control conditions shall be specifically taken into account.

5:3.7-7 Storm Drainage Pipes

A. **Staking of Drainage Lines** - Storm drainage lines shall be staked at each box or at intervals that would be sufficient to check alignment and grade. The use of lasers to enhance control of vertical and horizontal alignments is recommended.

B. **Minimum Diameter** - The minimum size storm drainage pipe shall be eighteen (18) inches in diameter.

C. **Slope** - The minimum allowable slope for storm drainage pipe shall be one-half of one percent (0.5 % or 0.005 ft/ft) and/or a minimum flow velocity of three (3) feet per second at all flow levels. Maximum allowable slope is twenty (20) percent. Any storm drainage pipe designed on a grade in excess of ten (10) percent shall require pipe anchors (thrust blocks) to prevent pipe separation.

D. **Side Property Drainage Ditches** - Side property line drainage ditches shall be piped to the rear property line or for a minimum distance of 150 feet, whichever is less. Drainage system discharge points shall be designed to prevent concentrated point discharges onto adjacent properties unless the adjacent property owner has granted a written stormwater point discharge easement. The discharge velocity shall be in compliance with these standards based on the soil type.

E. **Outlet Protection** - Outlet protection is required at all pipe outfalls and should consist of grouted rip-rap on non-woven geotextile filter cloth, turf reinforcement mats (TRM), semi-rigid polymer transition mats, articulated concrete blocks, and/or other approved structural measures. The design of outlet protections shall be based on the current revision of the SCDHEC *Stormwater Management BMP Handbook*, manufacturer recommendations, and/or similar design methods.

F. **Pipe Specification** - The type and class of storm drainage pipe, as well as the construction, shall be in accordance with SCDOT specifications. Reinforced concrete pipe (RCP) shall be required in all load bearing installations such as under roads. Any type of pipe other than RCP shall be considered on a case-by-case basis.

G. **Cover** - A minimum of one (l) foot of cover shall be provided for all storm drainage pipes.

H. **Pipe Crossing Under Pavement** - Storm drainage pipe shall be placed to minimize the length running under pavement. Where it is necessary for pipe to cross under the roadway, the horizontal pipe alignment shall be as near to a ninety (90) degree angle as practicable but in no case shall the angle be less than forty-five (45) degrees. All cross lines in the roadway shall be compacted in twelve (12) inch lifts to ninety-five (95) percent of a standard proctor density and the top twelve (12) inches shall be compacted to 100 percent of a standard proctor density.

I. **Roadway Embankments** - Any open-end storm drainage cross line shall extend out to the toe of the roadway embankment. In no case shall the end of the pipe be within the five (5) foot shoulder area.

J. **Alignment of Pipe Discharges** - Storm drainage pipe discharging into a ditch or channel shall be aligned such that the angle of intersection, measured from the centerlines of flow, is less than or equal to ninety (90) degrees. In order to prevent scour and erosion, rip-rap or other suitable outlet protection is required from the outlet point to the bottom of the channel and on the opposite channel bank.

K. **Discharges into Ponds** - Storm drainage pipes discharging into a pond or lake shall have the discharge invert above the normal pool level and outlet protection is required from the invert to the pool level.

L. **Required Maintenance Access** - A maintenance access point shall be provided within every 300 feet for eighteen (18) inch diameter pipes, every 400 feet for twenty-four (24) inch diameter pipes and every 500 feet for larger diameter pipes.

5:3.7-8 Headwalls

All exposed ends of pipes shall be protected by a flared end section or one of the following types of head walls:

A. Concrete headwalls or headwalls made of brick plastered with grout are preferred, and shall be required on pipes located in major drainage channels. A headwall constructed without wings is acceptable on pipes twenty-four (24) inches or less in diameter. Pipes greater than twenty-four (24) inches in diameter shall require winged headwalls.
B. A rip-rap headwall is acceptable for pipes twenty-four (24) inches or less in diameter in some situations and will be considered on a case-by-case basis. A rip-rap headwall requires the use of both non-woven geotextile filter fabric and cementitious grout.

5:3.7-9 Catch Basins, Drop Inlets, and Junction Boxes

A. **SCDOT Specifications** - Materials and specifications shall be in accordance with SCDOT specifications.
B. **Access Covers** - Yard inlet basins (Type 9) and junction boxes with concrete covers shall have a metal ring and cover cast within the top for access.
C. **Access Rungs** - When the depth of the catch basin or junction box exceeds four (4) feet in depth, measured from the top, rungs/steps shall be provided for ascent and descent (steps are to be ASTM-C-478 or equivalent).
D. **Inside Dimensions** - The inside dimensions at the top of the catch basin or junction box shall be three (3) feet by three (3) feet. The inside of the catch basin or junction box shall be plastered with grout.
E. **Pipe Protrusion** - All pipes entering or exiting the drainage structure shall not protrude more than four (4) inches.
F. **Modified Florida Catch Basins** - All roadway catch basins shall be modified Florida catch basins, Type I or Type II.
G. **Inlet Capacity** - For calculation purposes, the maximum capacity of roadway catch basin inlets shall be ten (10) cfs on a slope and twelve (12) cfs in a sump condition.
H. **Location of Catch Basins** - Catch basins should be located outside of curve radii. If this is not practicable, the catch basin shall be set back one (1) extra foot from the standard location. The face of the catch basin shall be parallel with the chord of the curve radius by projecting lines from the sides of the catch basin box.
I. **Minimum Drop of Inlet and Outlet Inverts** - Each catch basin shall have a minimum drop of 0.2 feet from the invert in to the invert out.
J. **Box Floors** - The floor of the boxes shall be concrete as shown on the typical detail contained herein. A formed trough is recommended to improve channel flow.
K. **Pipe Elevation** - The elevation at the crown of any inlet pipe into a box shall be at or above the crown of the outlet pipe.
L. **Staking** - All storm drainage structures shall be staked to ensure proper alignment with the roadway.
M. **Backfill** - All backfill material around catch basins shall be clean, select material and shall be compacted to ninety-five (95) percent of a standard proctor maximum density.
N. **Cast Labels** - All yard, curb, and/or drop inlets and catch basin manhole covers, grates, and/or frames shall be cast with the stormwater message, "No Dumping - Drains to Waterways," or similar approved message. In addition, all associated covers shall be shown in the USF Item #8015522 ring

and cover detail, as illustrated below. Junction Box covers shall be cast with the message, "Storm Water," and shall be shown as in the USF Item # 8015479 ring and cover detail, as illustrated below. Equivalent frames and covers shall be reviewed on a case by case basis, and must be approved prior to construction.

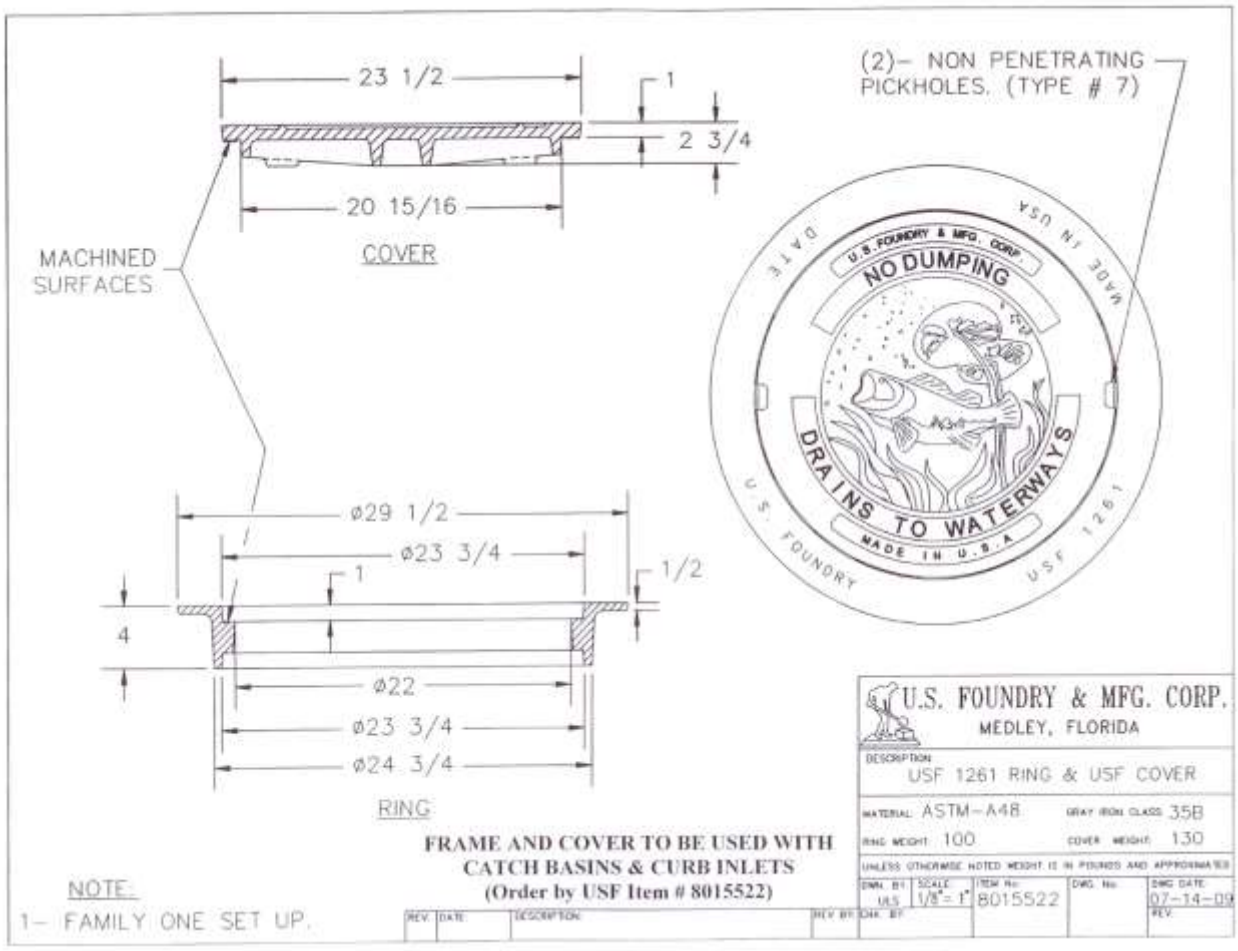

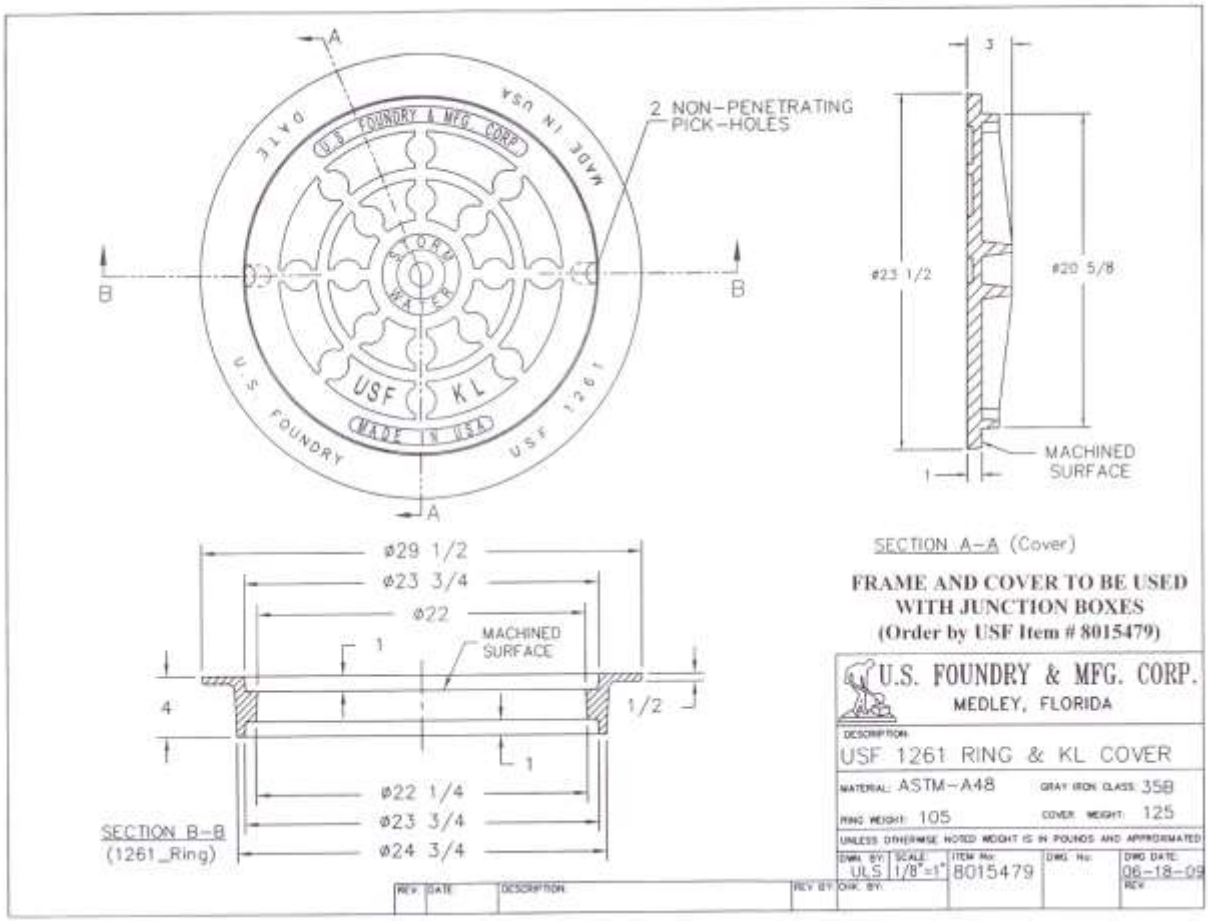

5:3.7-10 Open Channels

A. **Open Channel Configuration** - All open channels shall be uniform in configuration and shall be stabilized in a manner approved by the Public Works Director and/or County Engineer.

B. **Mannings Equation** - The design of open channels shall be based on the Mannings equation. The flow velocities for the design storm shall be less than 2.5 fps in sand soils and 5 fps in clay soils. If the velocity exceeds these parameters, the channel surface shall be mechanically treated with rip-rap, concrete, etc.

C. **Design Grade** - The minimum design grade for open channels shall be 0.005 ft/ft.

5:3.7-11 Detention Ponds

A. **Detention Pond Design** - Detention ponds shall be designed utilizing a traditional reservoir routing procedure and analyzing a twenty-four (24) hour storm. The NRCS Method of calculations shall be required on all detention ponds. It shall be recognized that ponds deal primarily with volume and if the volume is handled correctly, the peak flow shall also be accommodated.

B. **Outlet Control Structures** - Outlet control structures shall be designed to limit the discharge rate to the pre-developed peak rate for each of the return storms up to and including the design storm. The design storm shall be dictated by the contributing watershed area.

C. **Multiple and Multi-Staged Outlets** - In most cases, multiple outlets or the use of a multi-staged outlet, such as a "V"-notched" weir, shall be required.

D. **Pond Dam Piping** - The smallest diameter pipe that can be installed through a pond dam is eighteen (18) inches. If the outlet control device is less than eighteen (18) inches in diameter, the required size pipe shall be stubbed into a concrete box and an eighteen (I8) inch pipe shall exit the box to the

desired outfall point. This same principle can be applied toward providing emergency spillway capacity, even if larger diameter pipe sizes are designed. The top of the box can be utilized as an emergency overflow weir with the invert set so that the design storm is contained below this elevation.

E. **Emergency Spillway** - All detention ponds shall have an emergency spillway designed to safely pass the 100-year storm if the storage capacity is exceeded. The emergency spillway shall be mechanically stabilized to protect the integrity of the embankment. Large ponds shall be regulated by the State *Dams and Reservoirs Safety Act*.

F. **Freeboard** - All detention ponds in excess of one (1.0) acre-feet of storage capacity shall have a minimum of one (1.0) foot of freeboard above the design storm.

G. **Side Slopes** - Detention ponds shall have side slopes of three-to-one (3:1) or flatter, and require security fencing around the perimeter of the pond with a minimum twelve (12) foot wide access gate. Provisions shall be made for an access easement to the detention pond.

H. **Permanent Stormwater System Maintenance and Responsibility Agreement** - Prior to construction approval, the responsible party shall complete and submit a permanent stormwater system maintenance and responsibility agreement.

I. **Seepage Control** - Seepage control or anti-seep collars shall be provided for all outlet pipes.

5:3.7-12 Retention Ponds

A. **Minimum Design** - At a minimum, retention ponds shall be designed to provide the required storage capacity to accommodate the differential volume of runoff generated by the development, and shall have an emergency spillway capable of safely passing the 100-year storm.

B. **Where Required** - Generally, retention ponds are required in areas with no obvious discharge point; so the entire volume of the design storm shall be accommodated within the pond. Retention ponds do not have outlet structures and drain through infiltration into the soils. A design of a retention pond shall require soil borings, infiltration tests, and volume based calculations on a twenty-four (24) hour storm not using the pond bottom as a pervious area. Slope, security, and maintenance requirements are the same as for detention ponds.

C. **Pre- and Post- Construction Testing** - The design of a retention pond shall require soil borings, infiltration tests, and volume based calculations for the twenty-four (24) hour storm not using the pond bottom as a pervious area. Volume based calculations for all other storm events may use the pond bottom as previous area. Infiltration testing shall be required during pre-construction analysis and design and after construction of the pond.

Typically, infiltration testing should be conducted in the field using a double-ring infiltrometer (per the latest versions of ASTM D3385). Infiltration tests should not be conducted in the rain, within twenty-four (24) hours of significant rain events (> 0.5 inches), or when the temperature is below freezing. For pre-construction (design) testing, infiltration test(s) should be performed in the same area and as close as practicable to the anticipated bottom elevation of the pond. After construction of the pond, infiltration test(s) shall be performed on the bottom of the pond to verify there have been no significant changes in infiltration rates due to changes in soil strata or compaction during construction. A minimum of one (1) test per 10,000 square feet of pond bottom shall be required.

Note that infiltration testing should not be confused with percolation testing. Infiltration testing estimates the vertical movement of water through the bottom of the test area, whereas a percolation test allows water movement through both the bottom and sides of the test area. There are methods of converting percolation rates to infiltration rates, but these methods are not recommended and may only be used in the pre-construction stage.

5:3.7-13 Water Quality Ponds

A. **Where Required** - Water quality shall be guaranteed on those sites which contain five (5) acres or more of impervious area. In order to prevent discharge of pollutants, a permanent water quality pond shall be required. Permanent water quality ponds having a permanent wet pool shall be designed to store and release the first one (1) inch of runoff per impervious acre from the site over a twenty-four (24) hour period. The storage volume shall be designed to accommodate, at the minimum, one-half (½) inch of runoff from the entire site. Permanent water quality dry ponds not having a permanent wet pool shall be designed to release the first inch of runoff from the entire site over a twenty-four (24) hour period.

B. **Spillway Capacity** - The combined capacities of the principal and emergency spillway shall be sufficient to pass the peak rate of runoff for a 100-year, twenty-four (24) hour storm frequency.

C. **Location Restrictions** - No pond shall be constructed on a major drainage way or where the 100-year flood would inundate the basin.

5:3.7-14 Forebays

Any retention pond or wet pond (pond that has a permanent wet pool, whether for water quality, aesthetic, or site condition reasons) shall be required to have forebays. A forebay shall be required for all inlets to a retention pond or wet pond and shall be placed upstream of the main pool area. The forebay should be designed to trap the majority of the coarse fractions of any suspended solids in the storm drainage before it enters the main pool area. The forebay should be separated from the main wet pool area by barriers or baffles and may be constructed of earth, stones, riprap, gabions, geotextiles, and/or designed using manufactured treatment devices. The top of the forebay barrier can range from one (1) foot below the normal pool elevation up to an elevation above the permanent pool where it is its own distinct feature. General design criteria as employed for the design of temporary sediment traps should be considered in the design of the forebay area(s).

5:3.7-15 Subsurface Percolation Systems

A. **Test Data** - Subsurface percolation shall be designed on the basis of actual test data. Tests shall be consistent as to soils, elevations, locations, and water table depths with the system to which the test data will be applied.

B. **Clog Prevention and Cleaning** - Subsurface percolation systems shall be designed for prevention of clogging by fine material and for ease of cleaning with conventional pipe cleaning equipment. This requirement should include wrapping the perforated pipe and the infiltration trench with an appropriate fabric and providing sufficient cleanouts in the system.

C. **Overflow Outlets** - Subsurface percolation systems shall be designed with an overflow outlet in case the capacity of the system is exceeded.

5:3.7-16 Stagnant Water Conditions

All systems shall be designed and constructed to prevent stagnant water conditions.

5:3.7-17 Drainage Easements

A. **Storm Drainage Pipe Easements** - Storm drainage pipe easements shall provide adequate area for maintenance equipment to operate. Some typical easements are listed below:

Table 5-9 DRAINAGE EASEMENT WIDTH PER PIPE SIZE AND DEPTH		
Maximum Pipe Size	Maximum Depth to Invert	Width of Easement
18”	3.5’	20’
24”	5.0’	24’
36”	6.0’	30’
54”	7.0’	36’

Note: For depths greater than shown, add two (2) feet for each additional foot to the invert. For larger pipe sizes and/or multiple pipes, the easement width will be determined by the Public Works Director.

B. **Open Channels Easements** - The minimum easement width for an open channel/ditch is twenty-four (24) feet. For channels in excess of four (4) feet wide and/or four (4) deep, the easement width shall be increased by two (2) feet for each additional foot of width and/or depth or the width of the channel plus twenty (20) feet, whichever is wider.

C. **Detention Pond Easements** - An access easement of twenty (20) feet minimum shall be provided to the pond access gate. The entire pond and sufficient access on the top of the circumference of the pond shall be included as part of the drainage easement.

5:3.7-18 Hydric Soil Groups for Kershaw County

The Hydrologic Soil Groups in Kershaw County are listed in the *Soil Survey of Kershaw County* prepared by the United States Department of Agriculture, latest edition. For those soils that list a dual grouping (example B/D), the worst-case characteristics shall be used.

A. Group “A” is sand, loamy sand, or sandy loam types of soils. Such soils have low runoff potential and high infiltration rates even when thoroughly wetted. They consist chiefly of deep, well to excessively drained sands or gravels, and have a high rate of water transmission.

B. Group “B” is silt loam or loam. Such soils have a moderate infiltration rate when thoroughly wetted and consist chiefly of moderately deep to deep, moderately well to well drained soils with moderately fine to moderately coarse textures.

C. Group “C” soils are sandy clay loam. Such soils have low infiltration rates when thoroughly wetted and consist chiefly of soils with a layer that impedes downward movement of water and soils with moderately fine to fine structure.

D. Group “D” soils are clay loam, silty clay loam, sandy clay, silty clay, or clay. This hydrologic soil group has the highest runoff potential. They have very low infiltration rates when thoroughly wetted and consist chiefly of clay soils with a high swelling potential, soils with a permanent high water table, soils with a clay pan or clay layer at or near the surface, and shallow soils over nearly impervious material.

5:3.7-19 Erosion Prevention and Sediment Control Design

A. **Implementation** - Erosion prevention and sediment control measures shall be coordinated with the sequence of grading, development, and construction operations. The ultimate intent of requiring erosion prevention measures is to prevent erosion from occurring at all, but if it should, additional sediment control measures shall be in place to control sediment on-site to prevent adverse impacts on the storm drainage system(s), adjacent property owners, and/or waters of Kershaw County. Control measures such as hydroseeding, berms, intercepting swales, terraces, and sediment traps shall be required prior to the start of each increment of the construction/development process.

Erosion prevention and sediment control measures shall be in accordance with but, not limited to those depicted in the current version of the *South Carolina DHEC Storm Water Management BMP Handbook*. Kershaw County encourages the use of innovative erosion prevention and sediment control technologies and techniques, but reserves the right to approve these techniques on a case-by-case basis.

B. **Plan Requirements** - The erosion prevention and sediment control plan shall include, at a minimum, the following:
   1. **Construction Sequence** - A construction sequence listing the control measures to be installed prior to initiation of grading/construction operations.
   2. **Soil Description** - A general description of the predominant soil types on the site.
   3. **Calculations** - Calculations supporting the efficiency of the control measures.
   4. **Stabilization, Erosion Prevention, and Sediment Control Plan** - A plan for temporary and permanent vegetative stabilization and structural erosion prevention and sediment control measures to be used during all phases of clearing, grading, filling, construction, and permanent development.
   5. **Grading Plan** - A complete and adequate grading plan for borrow pits and material processing facilities where applicable, including restoration and re-vegetation measures.
   6. **Maintenance Program** - A description of the maintenance program for sediment control facilities including inspection programs, vegetative establishment of exposed soils, method and frequency of removal and disposal of solid waste material removed from control facilities, and disposition of temporary structural measures.
   7. **Vehicle Tracking Countermeasures** - Plans to minimize vehicle tracking of sediments from land disturbing activities onto paved public roads. It is recommended that a stabilized construction entrance of at least fifty (50) feet in length be placed at the entrance. If the construction entrance area is to be improved as a permanent paved entrance, the construction entrance shall be removed and replaced with clean stone prior to paving.
   8. **Vehicle Wash Down** - If any vehicle wash down is required on-site, it shall be performed in a designate area shown on the plans and located in an area that is not subject to surface water runoff, and more than fifty (50) feet away from a storm drain, open ditch, or receiving water. No detergents shall be used.
   9. **Silt Barriers or Check Dams** - Silt barriers or check dams shall be placed at outfalls and/or across drainage channels prior to initiation of grading/construction operations, and shall be maintained during the duration of the job. It is critical that the silt barrier be appropriately selected, properly installed, and adequately maintained during the course of the project. Under no circumstances shall straw or hay bales be used as a sediment control measure nor shall silt fence be used across areas of concentrated flows such as outfalls or drainage channels. Additional silt barriers shall be installed at the request of Kershaw County if it becomes evident that erosion is occurring and sedimentation of adjacent properties or streets is imminent.
   10. **Stabilization Clause** - The plan shall list the SCDHEC fourteen (14) day stabilization clause.
   11. **Inspections** - Inspection procedures shall require that all erosion prevention and sediment control devices be inspected at least once every seven (7) calendar days and after any storm event of greater than one-half (0.5) inches of precipitation during any twenty-four (24) hour period.
   12. **Concrete Waste Management** - Any project involving poured-in-place concrete shall properly dispose of any waste material, whether disposal is on-site or off. At a minimum, concrete waste shall be disposed of at a location which is not subject to surface water runoff and is more than fifty (50) feet away from a storm drain, open ditch, or receiving water.

Any project which may potentially involve the pouring of 100 cubic yards or more of concrete shall provide, on the plans, either a statement designating where the waste will be disposed off-site or the location and details of a designated on-site concrete washout area. For on-site disposal, the washout from concrete equipment shall be disposed of into the following:

a. A pre-fabricated concrete washout box (which may be available from the local concrete supplier);
b. a designated slurry pit area that will later be backfilled;
c. an area where the concrete wash can harden, be broken up, and then disposed of as solid waste; and/or
d. any other acceptable method of containment and disposal.

13. **Dumpsters** - Kershaw County recommends that all dumpsters be covered, water tight, and secured to minimize the risk of illegal dumping and the leaching of contaminated stormwater from the dumpster. Should maintenance be required, the solid waste handling company shall be contacted to replace or repair the dumpster. At no time shall dumpsters be washed out on-site. Note that, based on site conditions and/or proximity to existing or proposed stormwater conveyance system(s), Kershaw County may require all the aforementioned criteria to be included in the stormwater management plan for the site, and may require the installation of covers on existing dumpsters. In addition, the owner may be required to perform regularly scheduled inspections to ensure the dumpster is maintained in proper working order.

The above list is meant to draw attention to several critical areas of the plans, but by no means should this list be considered exhaustive. All submittals shall still comply with all other requirements of this Article, the Kershaw County Stormwater Management Ordinance, and/or other Federal, State, or local regulations particularly in those areas that are considered to be part of a Municipal Separate Storm Sewer System (MS4).

C. **Less than One Acre Disturbed Areas** - Projects that disturb less than one (1) acre and are not part of a larger common plan (LCP) for development or sale shall comply with the requirements as outlined in the SCDHEC *Small Project Requirements for Non-Coastal Counties.*

D. **Greater than One, but Less than Two Acres Disturbed Areas** - For land disturbing activities involving greater than one (1), but less than two (2) acres of actual land disturbance which are not part of a larger common plan of development or sale, the person responsible for the land disturbing activity shall submit a simplified stormwater management and sediment control plan meeting the requirements of *Standards for Stormwater Management and Sediment Reduction* SCDHEC regulation, R.72-307H.

E. **Greater Than Two, but Less Than Five Acres Disturbed Areas** - For land disturbing activities involving more than two (2), but less than five (5) acres of actual land disturbance which are not part of a larger common plan of development or sale, a simplified permitting and approval process shall be used meeting the requirements of SCDHEC regulation R.72-307I. These activities are required to utilize best management practices (BMPs) to control erosion and sediment and to utilize appropriate measures to control the quantity of stormwater runoff.

F. **Greater Than Five Acres Disturbed Areas** - For land disturbing activities disturbing more than five (5) acres, the requirements of SCDHEC regulations R.72-305 and R.72-307 shall apply. However, the use of measures other than ponds to achieve water quality improvement are recommended on sites containing less than ten (10) disturbed acres.

G. **Ten Acres Disturbed Areas** - Water quality shall be guaranteed on those sites which disturb ten (10) acres or more. The stormwater runoff shall drain to a single outlet from land disturbing activities by using one of the following methods:

1. The plan shall control runoff during the land disturbance by a sediment basin where sufficient space and other factors allow these controls to be maintained until the final inspection. The

sediment basin shall be designed and constructed to accommodate the anticipated sediment loading from the land disturbance and to meet a removal efficiency of eighty (80) percent suspended solids or 0.5 ML/L peak settable solids concentration, whichever is less. The outfall device or system design shall take into account the total drainage area flowing through the disturbed area to be served by the basin; or,

2. Other practices may be acceptable if they achieve an equivalent removal efficiency of eighty (80) percent for suspended solids or 0.5 ML/L peak settable solids concentration, whichever is less. The efficiency shall be calculated for disturbed conditions for the ten (10) year, twenty-four (24) hour storm event.

H. **Maintenance** - During construction, the developer shall perform any required maintenance in a timely manner.

I. **Soil Stockpile** - Soil and other materials shall not be temporarily or permanently stored in locations which would cause suffocation of root systems of trees to be preserved. Stockpiles expected to remain in place in excess of one (1) month shall have at least temporary vegetation established.

J. **Stilling Basins** - Stilling basins and other energy dissipaters shall be designed/patterned after the designs shown in the latest Federal Highway Administration Hydraulic Engineering publication, *Hydraulic Design of Energy Dissipaters for Culverts and Channels*.

K. **Treatment of Cuts and Fills**

1. Cuts and/or fills shall be protected by adequate retaining walls when required for stability.
2. Fill shall not be placed adjacent to a channel bank where it will create bank failure and reduce the capacity of the stream or result in deposition of sediment downstream.
3. No fill is to be placed where it will slide or wash onto adjacent properties. No cut is to be created close enough to a property boundary to create erosion on adjacent properties.

L. **Establishment of Vegetation** - Vegetation on all disturbed areas shall be established at the earliest possible time and shall comply with the fourteen (14) day stabilization clause. Before final approval can be given for a development, a permanent stand of vegetation shall be established or at the very least, a temporary stand of vegetation shall be established supported with a letter of guarantee from a reputable landscaping firm regarding an adequate stand of permanent vegetation. In some cases, it may be necessary to require a cash bond to ensure that a permanent stand of vegetation will be established.

M. **Seeding Schedule** - A seeding schedule shall be provided on the engineering plans. In all cases, the schedule shall include temporary vegetation, permanent vegetation, fertilizer, lime, and mulch. Actual types of seeds, rates of seeds, fertilizer, lime, and mulch may vary depending on the soil type. Application of water may be required during dry seasons to provide moisture for seeds to sprout and grow. The District Conservationist of the Kershaw County Soil Conservation Service may review any suggested mixtures when submitted. At a minimum, the following requirements must be met:

1. On all vegetated swales or ditches with side slopes (cut or fill) steeper than three-to-one (3:1), four (4) to six (6) ounces per 1000 square feet of Weeping Love grass seed shall be added to any mixture. Swale and ditch bottoms shall be double seeded.
2. All slopes steeper than three-to-one (3:1) shall be hydroseeded.
3. Growth of ryegrass in early spring shall be suppressed to prevent it from choking out the permanent vegetation such as Bermuda or fescue.

5:3.7-20 Maintenance

A. **Maintenance During Construction** - The applicant/developer is responsible for maintenance of all completed stormwater management practices to ensure proper performance. Kershaw County shall ensure preventive maintenance through inspection of all stormwater management practices.

B. **Management Responsibility After Development** - Temporary and permanent erosion, sedimentation and stormwater management facilities, once installed and after final inspection has been completed, shall be maintained in one of the following manners:

1. **Facilities Maintained by Owner** - The owner of the property on which work has been done pursuant to Kershaw County regulations, or any other person or agent in control of such property, shall maintain in good condition and shall promptly repair and restore all grade surfaces, walls, drains, dams and structures, vegetation, erosion prevention and sediment control measures, and other protective devices. Such repairs or restorations and maintenance shall be in accordance with the approved engineering plan.

   The facilities to be maintained by the owner shall provide adequate access to permit Kershaw County authorities to inspect and, if necessary, to take corrective action. If the owner or any other person or agent in control of such property fails to properly maintain the facilities for which they are responsible, Kershaw County shall issue written notice specifically describing the deficiency. If the corrections are not completed within ten (10) days from receipt of such notice, Kershaw County may have the deficiencies corrected at the responsible party's expense.
2. **Facilities Maintained by Kershaw County** - All facilities to be maintained by Kershaw County shall be designed and constructed in accordance with the requirements of the standards herein, and all such facilities shall be dedicated to the County for maintenance by recordation after the County has accepted conveyance of such facilities by appropriate action of the County Council. Such conveyance shall include sufficient ingress-egress easements to permit the County to properly maintain such facilities.

5:3.7-21 As-Built Engineering Plans

Upon completion of any project involving infrastructure (roads, storm drainage systems with structures, closed pipes, ponds, etc.), and prior to final plat approval, Kershaw County requires the submittal of as-built engineering plans and calculations. As applicable, the following information shall be submitted on or with the as-built engineering plans:

A. **General**

1. The subdivision name and the approved road names.
2. The developer's name, address, and contact information.
3. The engineer's and surveyor's name, address, and contact information.
4. The contractor's name, address, and contact information.
5. The scale of the engineering plans accompanied by a bar scale.
6. Depiction of the locations and elevations of the benchmarks on the project.
7. Depiction of any wetlands and/or designated waters of the state (WoS).

B. **Roadways**:

1. A copy of the asphalt tickets.
2. A copy of the rock tickets.
3. A copy of the seeding tickets.
4. Pavement widths on the plan view.
5. A typical roadway cross-section.
6. A detail of the roadway with base and surface thicknesses.
7. A plan view of the roadway with centerline stationing and geometric data.
8. Horizontal and vertical curve information.
9. A profile of the roadway with centerline elevations.
10. Right-of-way widths on the plan view. Metes and bounds for the right-of-way shall be provided.
11. Utility elevations at all road crossings on the roadway profile.

C. **Storm Drainage Systems**:

1. The location of all storm drainage structures and utilities.
2. All storm drainage and utility easements.
3. Storm drainage profile with all relevant elevations.
4. Detention/retention pond information (stage-storage-discharge values).
5. A drawing of the outlet structures and spillways with elevations and dimensions.
6. Details of the storm drainage structures.

5:3.7-22 Standard Details

The standard details listed below can be located on the following pages:

A. Modified Florida Type I Catch Basin - Top View
B. Modified Florida Type II Catch Basin - Top View
C. Modified Florida Type I and II Catch Basin - Front View
D. Modified Florida Type I and II Catch Basin - Side View
E. Type 9 Inlet Plan and Section View
F. Junction Box Plan and Section View
G. Rip-Rap Headwall (Grouted)
H. Straight Headwall (24” Diameter Pipe or Less)
I. Typical Headwall (Pipes Over 24” Diameter)

NOTES:

- FOR 18"-24" I.D. PIPES, USE 3'-0" X 3'-0" BOX.
- FOR PIPES OVER 24" I.D., MAKE MINIMUM LENGTH & WIDTH OF C.B. = O.D. OF PIPE + 6" EACH SIDE.
- ALL CATCH BASINS MUST HAVE A 3'-0" X 3'-0" FINISHED OPENING.
- STEPS ARE REQURED IN CATCH BASINS 4' DEEP OR DEEPER FROM TOP OF FRAME. STEPS ARE TO BE 18" O.C. & MUST CONFORM TO ASTM-C-478 OR EQUIVALENT.
- COMPACT BACKFILL OF BOX TO 95% OF A STANDARD PROCTOR DENSITY.
- 4" PVC PIPE MUST BE INSTALLED AT SUBGRADE UNDER THROAT.

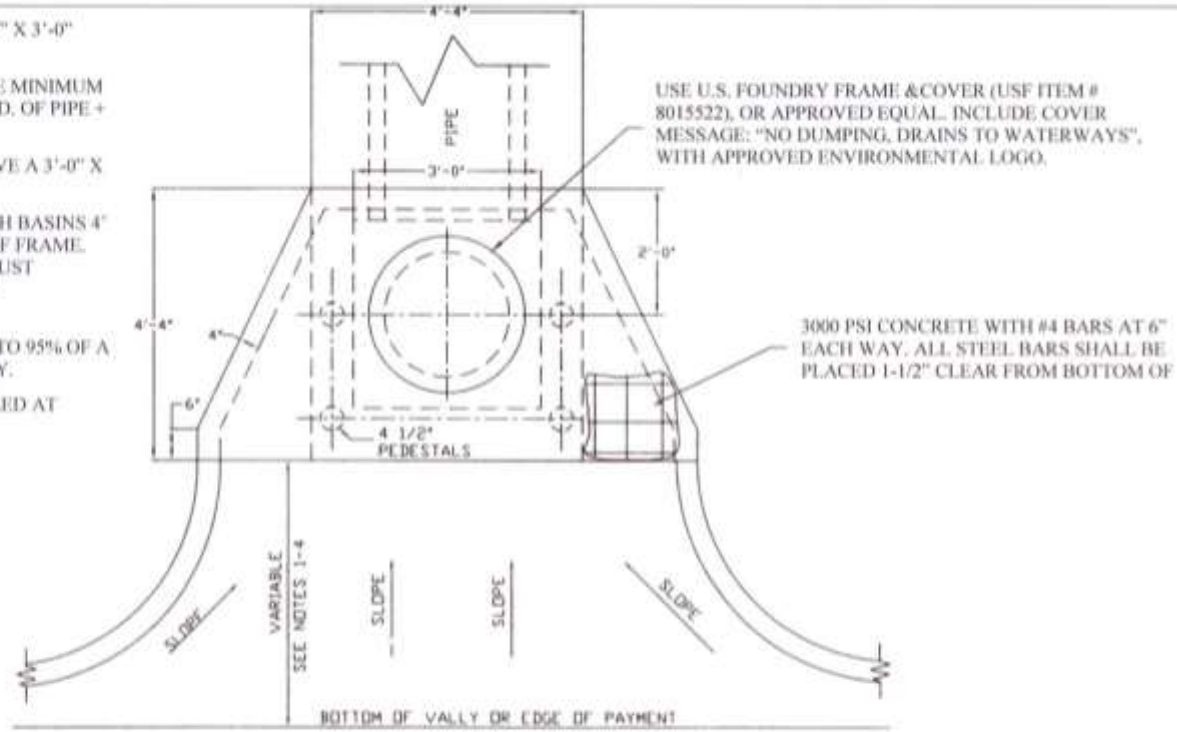

NOTES:

1) 1' MINIMUM & 3' MAXIMUM OFFSET FROM EDGE OF PAVEMENT (FLUSH WITH BARRIER CURB ROAD SECTION).
2) 3' MINIMUM & 5' MAXIMUM OFFSET FROM EDGE OF PAVEMENT ON ROLLED CURB ROAD SECTION.
3) 3' MINIMUM & 5' MAXIMUM OFFSET FROM VALLEY GUTTER ROAD SECTION.
4) ADD ONE (1) ADDITIONAL FOOT OF OFFSET IF CATCH BASIN IS LOCATED IN INTERSECTION RADIUS.

MODIFIED FLORIDA TYPE I CATCH BASIN - TOP VIEW
(NTS)

NOTES:

- FOR 18"-24" I.D. PIPES, USE 3'-0" X 3'-0" BOX.
- FOR PIPES OVER 24" I.D., MAKE MINIMUM LENGTH & WIDTH OF C.B. = O.D. OF PIPE + 6" EACH SIDE.
- ALL CATCH BASINS MUST HAVE A 3'-0" X 3'-0" FINISHED OPENING.
- STEPS ARE REQURED IN CATCH BASINS 4' DEEP OR DEEPER FROM TOP OF FRAME. STEPS ARE TO BE 18" O.C. & MUST CONFORM TO ASTM-C-478 OR EQUIVALENT.
- COMPACT BACKFILL OF BOX TO 95% OF A STANDARD PROCTOR DENSITY.
- 4" PVC PIPE MUST BE INSTALLED AT SUBGRADE UNDER THROAT.

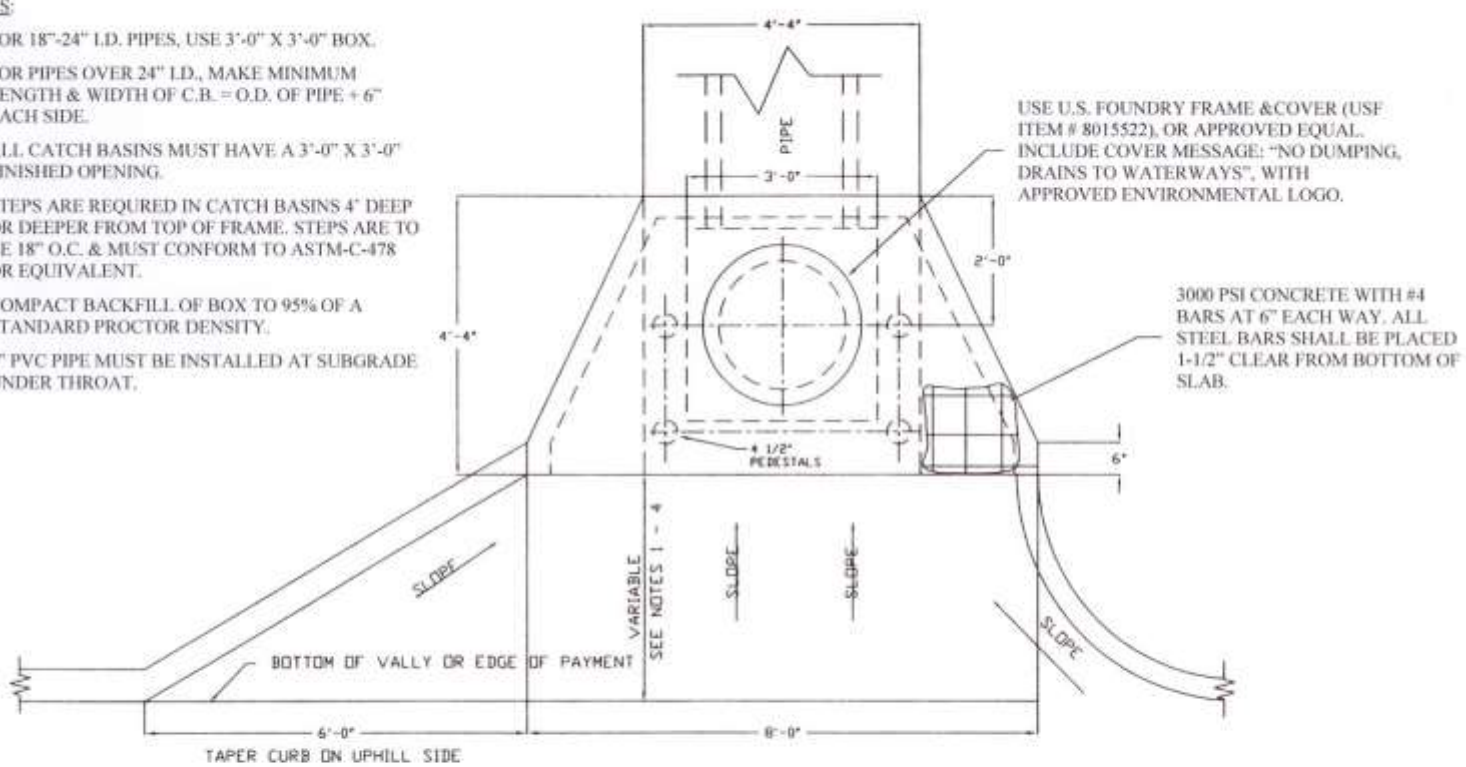

USE U.S. FOUNDRY FRAME &COVER (USF ITEM # 8015522), OR APPROVED EQUAL. INCLUDE COVER MESSAGE: "NO DUMPING, DRAINS TO WATERWAYS", WITH APPROVED ENVIRONMENTAL LOGO.

3000 PSI CONCRETE WITH #4 BARS AT 6" EACH WAY. ALL STEEL BARS SHALL BE PLACED 1-1/2" CLEAR FROM BOTTOM OF SLAB.

NOTES:

1) 1' MINIMUM & 3' MAXIMUM OFFSET FROM EDGE OF PAVEMENT (FLUSH WITH BARRIER CURB ROAD SECTION).
2) 3' MINIMUM & 5' MAXIMUM OFFSET FROM EDGE OF PAVEMENT ON ROLLED CURB ROAD SECTION.
3) 3' MINIMUM & 5' MAXIMUM OFFSET FROM VALLEY GUTTER ROAD SECTION.
4) TYPE II CATCH BASIN TO BE USED WHERE GUTTER SLOPE IS 5% OR GREATER.

MODIFIED FLORIDA TYPE II CATCH BASIN - TOP VIEW

(NTS)

NOTES:

- FOR 18"-24" I.D. PIPES, USE 3'-0" X 3'-0" BOX.
- FOR PIPES OVER 24" I.D., MAKE MINIMUM LENGTH & WIDTH OF C.B. = O.D. OF PIPE + 6" EACH SIDE.
- ALL CATCH BASINS MUST HAVE A 3'-0" X 3'-0" FINISHED OPENING.
- STEPS ARE REQURED IN CATCH BASINS 4' DEEP OR DEEPER FROM TOP OF FRAME. STEPS ARE TO BE 18" O.C. & MUST CONFORM TO ASTM-C-478 OR EQUIVALENT.
- COMPACT BACKFILL OF BOX TO 95% OF A STANDARD PROCTOR DENSITY.
- 4" PVC PIPE MUST BE INSTALLED AT SUBGRADE UNDER THROAT.
- USE U.S. FOUNDRY FRAME &COVER (USF ITEM # 8015522), OR APPROVED EQUAL. INCLUDE COVER MESSAGE: "NO DUMPING, DRAINS TO WATERWAYS", WITH APPROVED ENVIRONMENTAL LOGO.

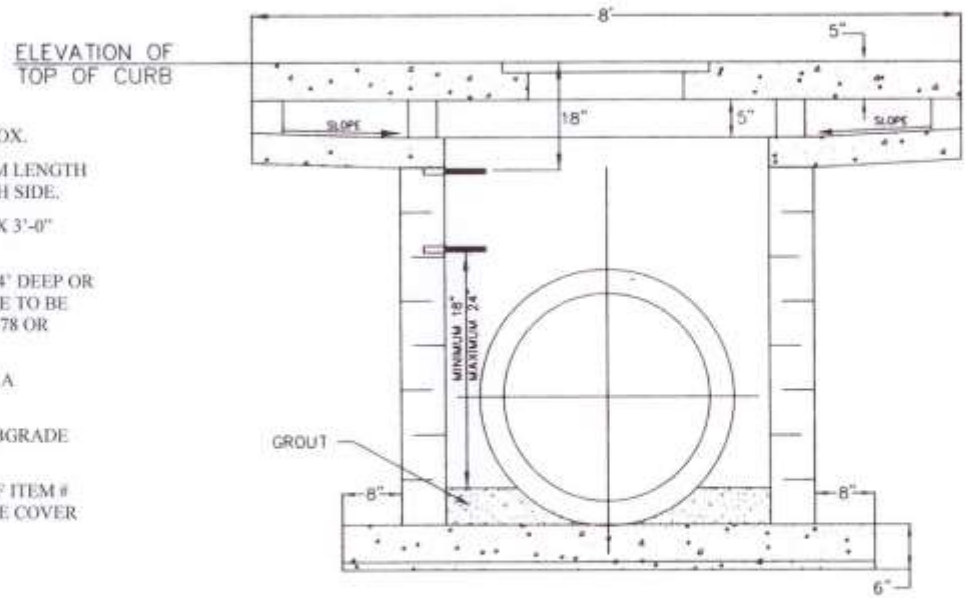

MODIFIED FLORIDA TYPE I & II
CATCH BASIN - FRONT VIEW
(NTS)

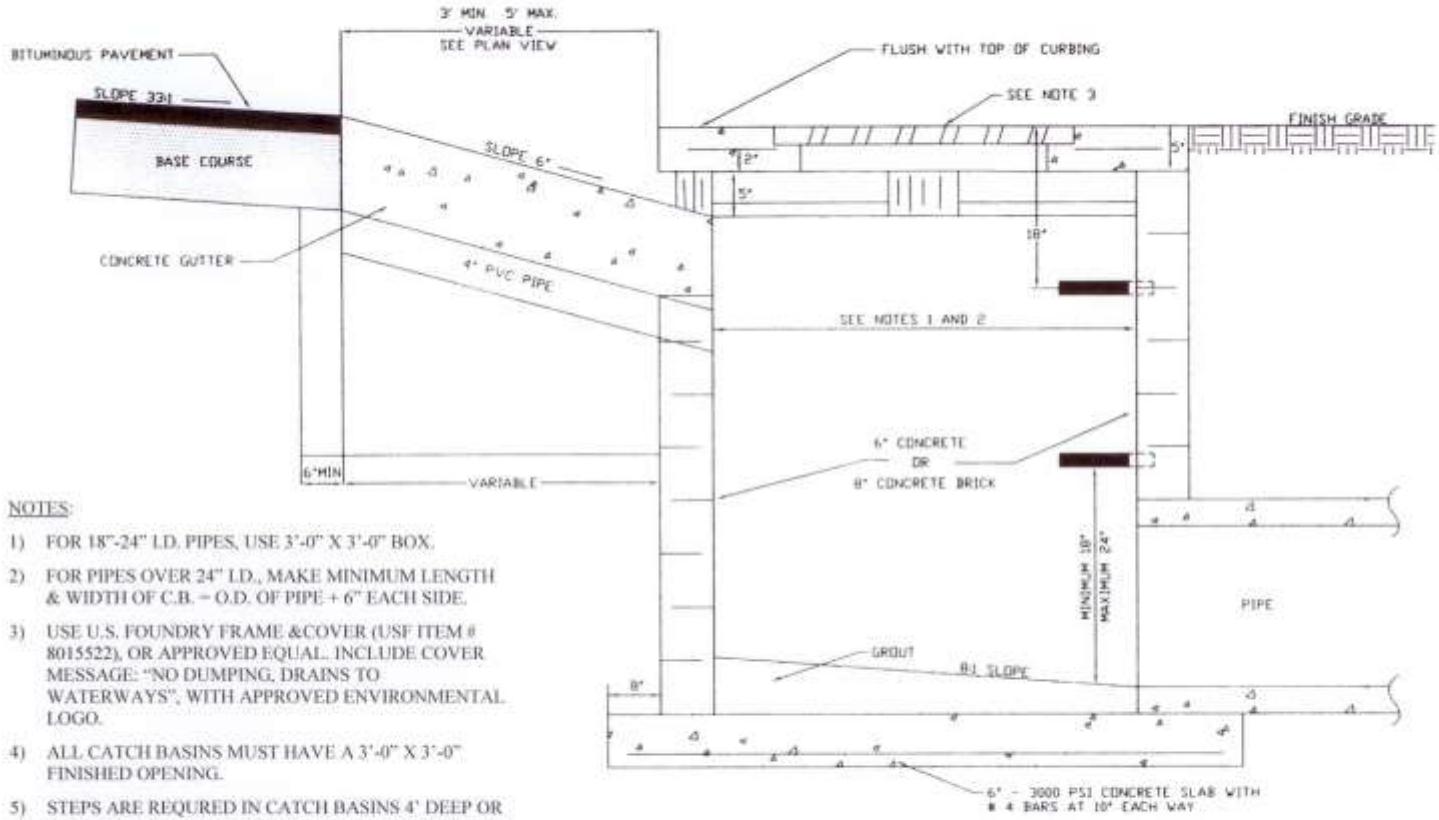

NOTES:

1) FOR 18"-24" I.D. PIPES, USE 3'-0" X 3'-0" BOX.
2) FOR PIPES OVER 24" I.D., MAKE MINIMUM LENGTH & WIDTH OF C.B. = O.D. OF PIPE + 6" EACH SIDE.
3) USE U.S. FOUNDRY FRAME &COVER (USF ITEM # 8015522), OR APPROVED EQUAL. INCLUDE COVER MESSAGE: "NO DUMPING, DRAINS TO WATERWAYS", WITH APPROVED ENVIRONMENTAL LOGO.
4) ALL CATCH BASINS MUST HAVE A 3'-0" X 3'-0" FINISHED OPENING.
5) STEPS ARE REQURED IN CATCH BASINS 4' DEEP OR DEEPER FROM TOP OF FRAME. STEPS ARE TO BE 18" O.C. & MUST CONFORM TO ASTM-C-478 OR EQUIVALENT.
6) COMPACT BACKFILL OF BOX TO 95% OF A STANDARD PROCTOR DENSITY.
7) 4" PVC PIPE MUST BE INSTALLED AT SUBGRADE UNDER THROAT.

MODIFIED FLORIDA TYPE I & II
CATCH BASIN - SIDE VIEW
(NTS)

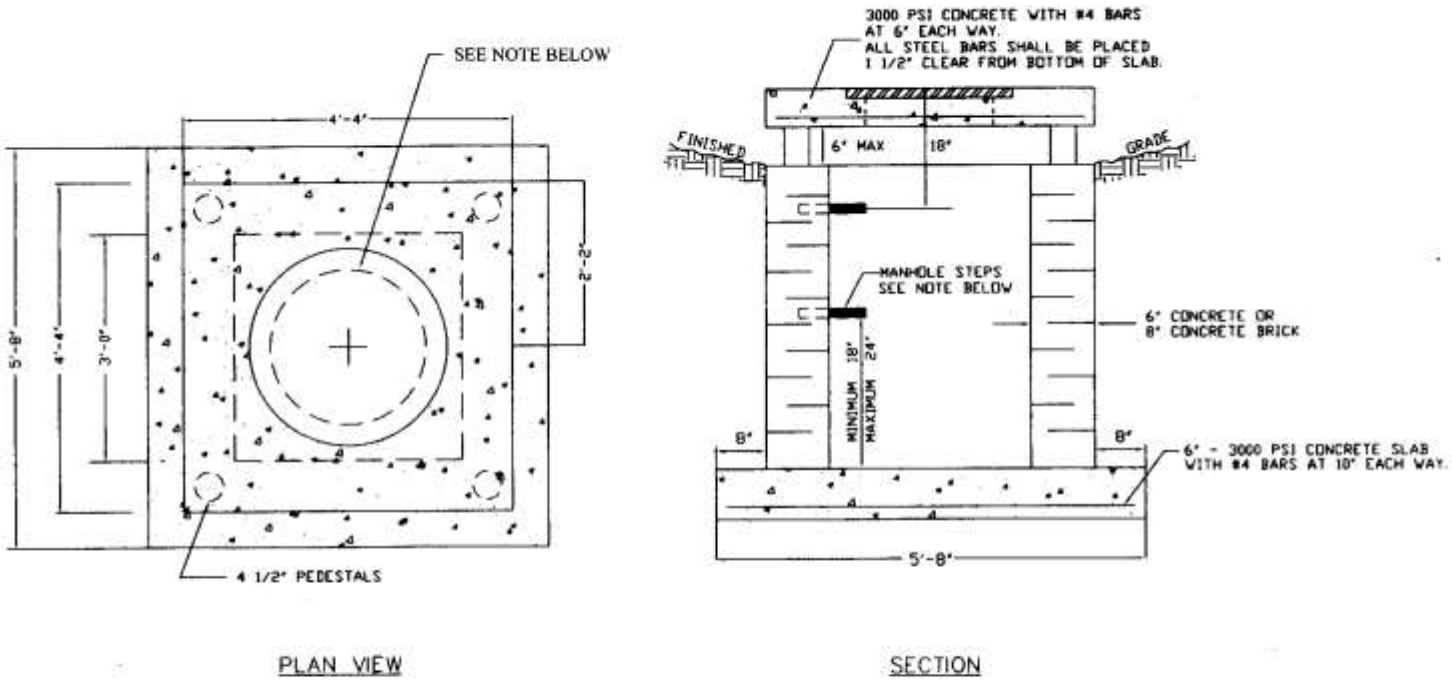

NOTES:

- USE U.S. FOUNDRY "1261"FRAME & "OC" COVER, OR APPROVED EQUAL. INCLUDE COVER MESSAGE: "NO DUMPING, DRAINS TO WATERWAYS".
- STEPS ARE REQURED IN JUNCTION BOXES 4' DEEP OR DEEPER FROM TOP OF FRAME. STEPS ARE TO BE 18" O.C. & MUST CONFORM TO ASTM-C-478 OR EQUIVALENT.

TYPE 9 INLET
PLAN & SECTION VIEW
(NTS)

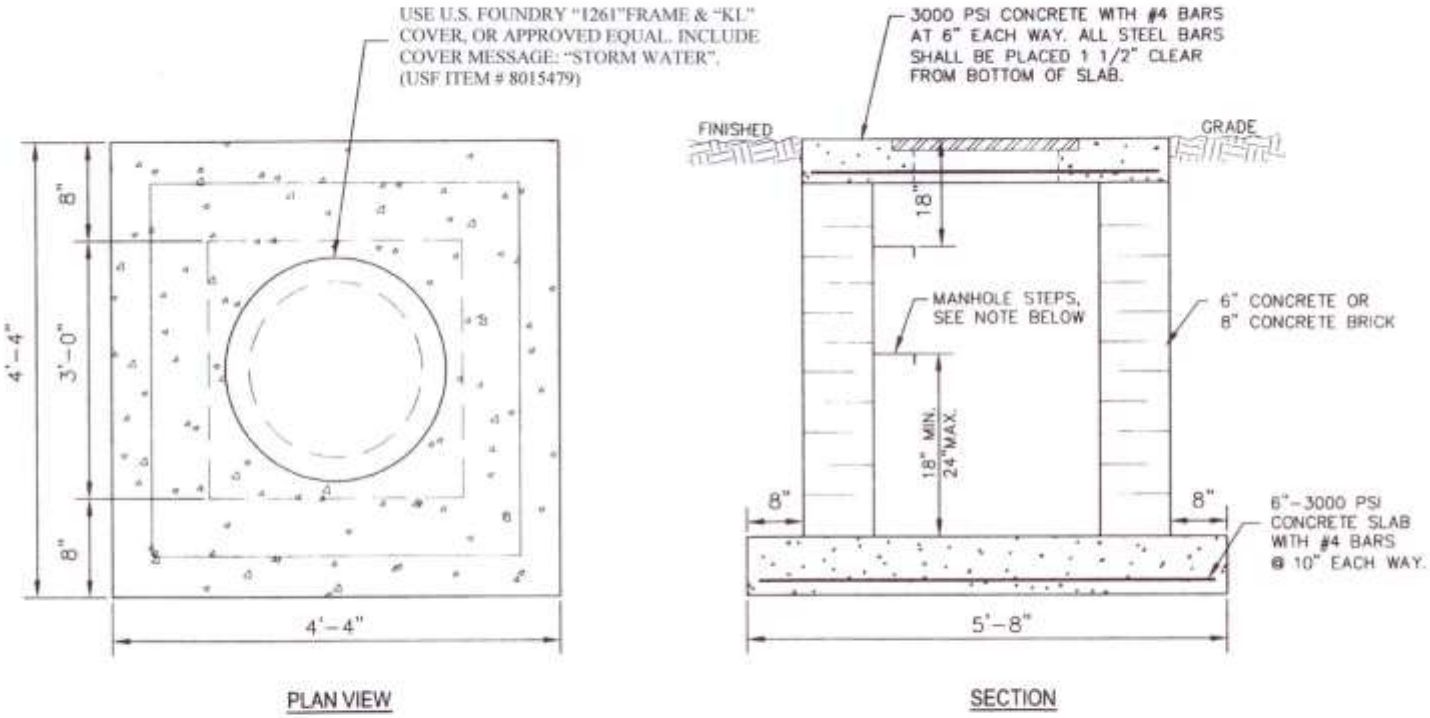

NOTES:

- STEPS ARE REQURED IN JUNCTION BOXES 4' DEEP OR DEEPER FROM TOP OF FRAME. STEPS ARE TO BE 18" O.C. & MUST CONFORM TO ASTM-C-478 OR EQUIVALENT.

JUNCTION BOX
PLAN & SECTION VIEW
(NTS)

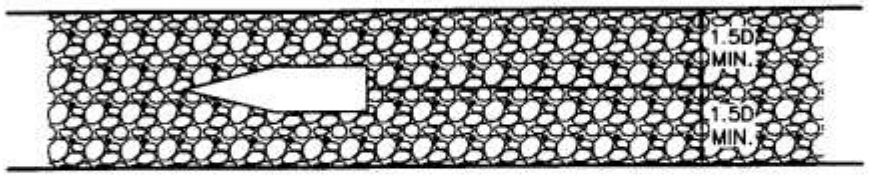

PLAN

NOTES:

1. WHEN PIPE EMPTIES INTO A DITCH OR SWALE THE RIPRAP WILL TAKE THE SHAPE OF THE DITCH OR SWALE.

2. MINIMUM DESIGN SHOULD EQUAL SCDOT STANDARD SPECIFICATIONS FOR HIGHWAY CONSTRUCTION, LATEST EDITION, SECTION 804.

3. THIS HEADWALL FOR 24" PIPES OR LESS.

4. AVERAGE RIPRAP SIZE AND APRON LENGTH SHALL DEPEND ON THE VELOCITIES AT THE END OF THE PIPE.

5. RIP RAP SHALL BE GROUTED IN PLACE.

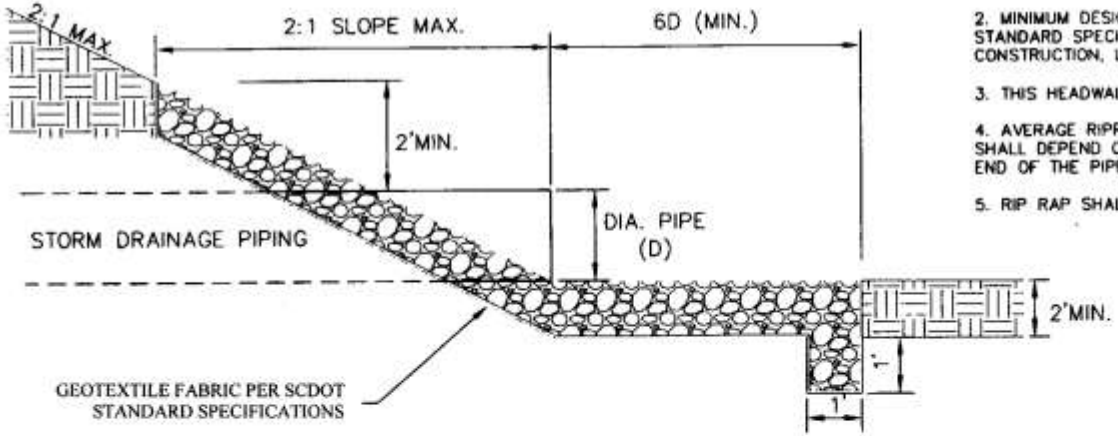

SECTION

RIP-RAP HEADWALL
(GROUTED)
(NTS)

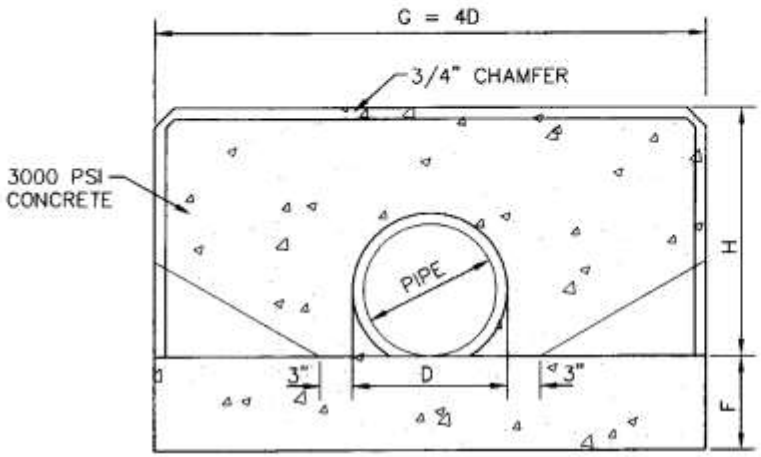

FRONT ELEVATION

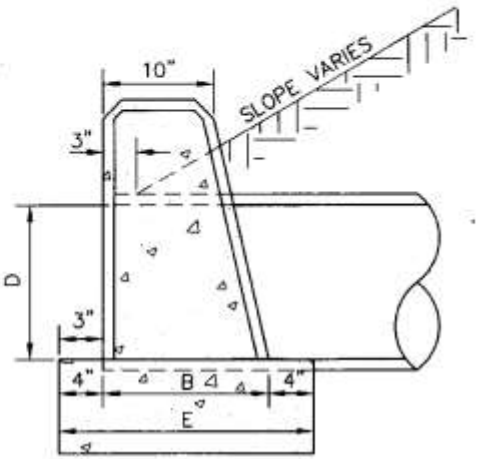

SIDE ELEVATION

DIMENSIONS							QUANTITIES FOR ONE CONCRETE PIPE			
OPENING		WALL			FOOTING		CLASS "B" CONCRETE			
D	AREA SQ. FT.	* G	H	B	E	F	CUBIC FEET		TOTAL	
							WALL	FOOT	CU. FT.	CU. YD.
15"	1.2	5'-0"	2'-3"	1'-2"	1'-10"	1'-2"	9.0	10.7	19.7	0.73
18"	1.8	6'-0"	2'-6"	1'-3"	1'-11"	1'-3"	12.5	14.4	26.9	0.99
24"	3.1	8'-0"	3'-0"	1'-4"	2'-0"	1'-4"	20.2	21.3	41.5	1.54

* FOR EACH ADDITIONAL PIPE (15" TO 24") ADD 2'-0" + O.D. OF PIPE

NOTES:

- 8" MASONRY CONSTRUCTION PLASTERED WITH GROUT MAY BE USED.
- WHEN DITCH PAVING IS SPECIFIED, RECESS SURFACE OF FOOTING TO ACCOMMODATE THICKNESS OF DITCH PAVING.

STRAIGHT HEADWALL
(24" DIAMETER PIPE OR LESS)
(NTS)

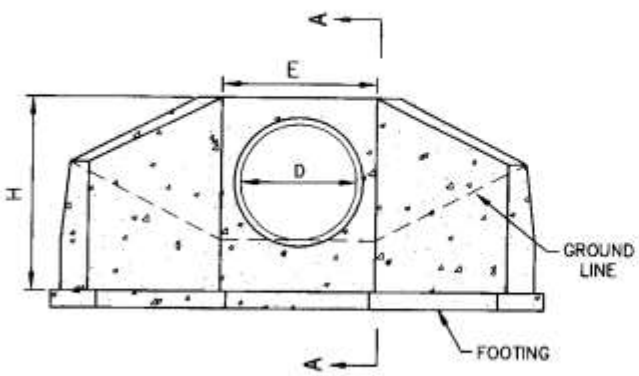

FRONT ELEVATION

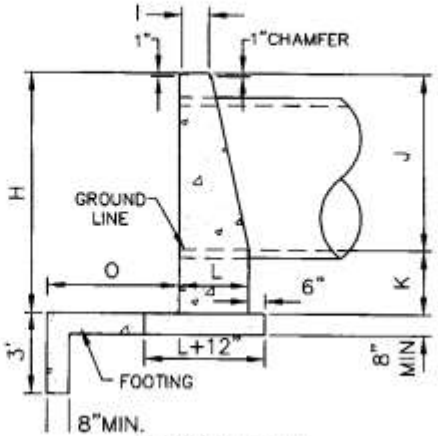

SECTION "A-A"

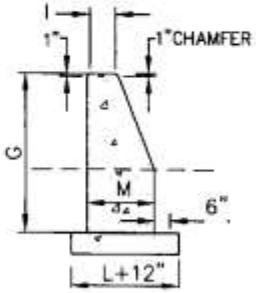

SECTION "B-B"

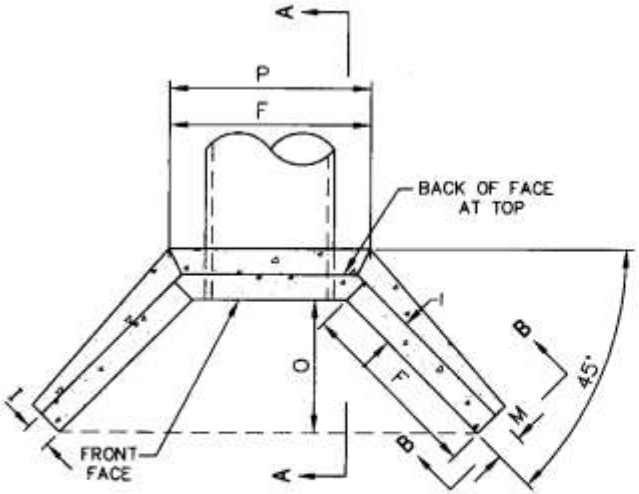

PLAN VIEW

2 : 1 SLOPE												
D	E	F	G	H	I	J	K	L	M	N	O	P
30"	4'-0"	4'-3"	4'-0"	5'-6"	12"	3'-6"	24"	1'-6"	18"	2'-0"	3'-0"	5'-4"
36"	4'-6"	5'-0"	4'-3"	6'-0"	12"	4'-0"	24"	1'-8"	18"	2'-3"	3'-6"	5'-11"
42"	5'-0"	5'-9"	4'-6"	6'-6"	12"	4'-6"	24"	1'-10"	18"	2'-6"	4'-0"	6'-6"
48"	5'-6"	6'-6"	4'-9"	7'-0"	12"	5'-0"	24"	2'-0"	18"	2'-9"	4'-6"	7'-2"
54"	6'-0"	7'-3"	5'-0"	7'-6"	12"	5'-6"	24"	2'-2"	18"	3'-0"	5'-0"	7'-10"
60"	6'-6"	8'-0"	5'-3"	8'-0"	12"	6'-0"	24"	2'-4"	18"	3'-3"	5'-8"	8'-5"
72"	7'-6"	9'-6"	5'-9"	9'-10"	12"	7'-0"	24"	2'-8"	18"	3'-9"	6'-9"	9'-9"
84"	8'-6"	11'-0"	6'-3"	10'-0"	12"	8'-0"	24"	3'-0"	18"	4'-3"	7'-9"	11'-0"

NOTES:

- FOR EACH ADDITIONAL PIPE LINE, ADD 2'-0" (OR ONE-HALF DIAMETER OF PIPE, WHICHEVER IS GREATER) + O.D.
- ALL CONCRETE SHALL BE 3,000 PSI OR GREATER.

TYPICAL HEADWALL
(PIPES OVER 24" DIAMETER)
(NTS)

5:3.8 Street Standards

5:3.8-1 Definition of Street

Street - Any publicly or privately maintained thoroughfare (street, road, drive, avenue, circle, way, lane, boulevard, etc.) or space which has been dedicated, deeded, designed, or used for vehicular traffic that provides access to more than three (3) parcels of land. Streets constructed after the effective date of this Ordinance shall be constructed to all applicable Kershaw County engineering specifications. The words, *street* and *road* shall be used interchangeably in this section.

5:3.8-2 Street Classifications

Design standards for County-maintained roads shall be determined by the following classifications:

A. **Residential Local (RL) Streets** - Internal subdivision streets with usage largely restricted to local traffic. For purposes of this classification, a residential local (RL) shall be any residential road that is projected to receive no more than 2,000 average daily trips (ADT) per the most recent edition of the *Institute of Transportation Engineers (ITE) Trip Generation Manual* and the *ITE Trip Generation Handbook.*

B. **Residential Collector (RC) Streets** - Streets connecting residential development to major arterial roads. For purposes of this classification, the distinction between an RL and an RC classification shall be that a residential collector (RC) street shall be projected to receive in excess of 2000 average daily trips (ADT) per the most recent edition of the *Institute of Transportation Engineers (ITE) Trip Generation Manual* and the *ITE Trip Generation Handbook.*

C. **Light Commercial and Industrial (LC/I) Streets** - Collector roads connecting adjoining light commercial and light industrial development to major arterial roads. For purposes of this classification, a light commercial and industrial (LC/I) road shall be any primarily commercial and/or industrial road that is projected to receive 2,001-4,000 average daily trips (ADT) per the most recent edition of the *Institute of Transportation Engineers (ITE) Trip Generation Manual* and the *ITE Trip Generation Handbook.*

D. **Arterial Streets** - Major traffic routes within Kershaw County. In almost every case arterial and higher classifications such as interstate highways within Kershaw County are State and Federal highways. In the event that a County-maintained arterial road is proposed, the design standards for arterials and higher classification roads shall be approved by the County Engineer and Public Works Director on a case by case basis. The County Engineer will make the determination based on a complete soils report and the designed traffic load. For purposes of this classification, an arterial shall be any road that is projected to receive in excess of 4,000 average daily trips (ADT) per the most recent edition of the *Institute of Transportation Engineers (ITE) Trip Generation Manual* and the *ITE Trip Generation Handbook.*

5:3.8-3 General Design Criteria

The design criteria contained in this section applies to the construction of new streets which will be accepted into the Kershaw County road maintenance system and for approval of proposed private road design for new developments. All Kershaw County roads shall be designed and constructed equal to or better than the standards required by South Carolina Department of Transportation (SCDOT) specifications. A twenty (20) year roadway life is the design

requirement for Kershaw County. The design speed shall be thirty (30) mph for residential roadways and forty (40) mph for commercial roadways. In reviewing private road design for new development, the Planning Official, County Engineer, and/or Planning and Zoning Commission, as applicable, may consider alternate design standards in consideration of the following:

A. Limited use.
B. Site topographic or geophysical conditions.
C. Stormwater management.
D. The preservation of any natural features on the site.
E. The avoidance of areas of environmental sensitivity.
F. The minimizing of negative impacts and alteration of natural features.
G. The avoidance of adversely affecting ground water and aquifer recharge.
H. The reduction of cut and fill.
I. The avoidance of unnecessary impervious cover.
J. The prevention of flooding.
K. The taking into account of other site-specific design considerations.

5:3.8-4 Right-of-Way

A. **Proposed County Roads** - For residential local (RL) streets, the minimum right-of-way for a Kershaw County road is fifty (50) feet, which is sufficient for any RL and/or two (2) lane road with a pavement width equal to or less than thirty (30) feet which is not reasonably expected to require future widening. A uniform right-of-way width should be maintained on the outside edge of pavement around islands, cul-de-sacs, medians, and at intersections. On wider road sections or a higher order of road, a minimum sixty-six (66) foot right-of-way is required.
B. **Existing County Roads** - Any development encompassing an existing county road shall dedicate the standard right-of-way per this section in order to be approved. For developments located on only one (1) side of an existing county road, the required right-of-way, measured from the centerline of the existing road shall be dedicated to Kershaw County in order to be approved.

5:3.8-5 Required Street Improvements

A. **Creation of New Streets and Roads or the Extension of Streets or Roads** - All subdivisions involving the creation of a new street or road, and subdivisions involving the extension of an existing County-maintained dirt road, or the development of a new street/road accessing or tying into an existing County-maintained dirt road shall meet the minimum standards for street and road design as specified in this section.
B. **Responsibility and Cost of Improving Existing Access Roads** - Where improvements to an existing street or road are identified as being required in a traffic management plan per this Ordinance, the applicant/developer shall be required at his sole expense and as a condition of approval, to provide and install such improvements, including securing the additional right-of-way required in accordance with applicable provisions of this Ordinance. The County may assist the developer/owner by use of its power of imminent domain to secure the necessary right-of-way, should additional right-of-way be required.
C. **Encroachment Permits** - An encroachment permit, which controls the impacts of traffic, storm drainage, and sediment entering a public road right-of-way, shall be obtained from the

South Carolina Department of Transportation (SCDOT) and/or Kershaw County Department of Public Works (as applicable) before approval of construction of a project requiring an encroachment or use of the right-of-way. Encroachments include permanent access "curb cuts" with drainage and other improvements and non-routine maintenance within the right-of-way. Whereas Kershaw County accepts the application forms and documents submitted to the SCDOT Maintenance Engineer, it should be noted that in some situations Kershaw County requirements differ from SCDOT standard requirements for the location of drives and roads.

5:3.8-6 Road Construction Standards

A. **Design Thickness Requirements** - The design thickness requirements are dictated by the soil conditions on the proposed site. If the on-site soils are included on the list of unstable soils provided by the USDA Soil Conservation Service, the design thicknesses shall be more stringent than the standard design. The following table provides two sets of design criteria. The first value provides the standard design thickness in inch requirements. The second value provides the design thickness in inches for unstable soils. (Alternative thicknesses will be considered that provide an equivalent structural number).

B.

Table 5-10 ROAD DESIGN THICKNESS REQUIREMENTS

TYPE LAYER	RL Thickness in Inches		RC & LC/I Thickness in Inches	
	STANDARD	UNSTABLE SOIL	STANDARD	UNSTABLE SOIL
Hot Plant Mix				
Surface	2.0	3.0	2.0	3.0
Macadam Base	6.0	6.0	8.0	9.0
Prepared Subgrade	12.0	12.0	12.0	12.0
Full Depth Paving				
AC Surface Course	1.0	1.25	1.25	1.5
AC Binder Course	1.5	2.0	2.0	1.5
AC Base Course	2.5	3.0	3.0	4.0
Prepared Subgrade	12.0	12.0	12.0	12.0

C. **Unsuitable Soils** - Soils unsuitable for road construction are as follows:

Table 5-11 SOILS UNSUITABLE FOR ROAD CONSTRUCTION	
Unstable Soils	**Major Constraint to Road Construction**
Canty	Low strength, wetness
Cartecay	Wetness, flooding
Chewacla	Low strength, wetness, flooding
Congaree	Flooding
Dororan	Flooding, ponding
Georgeville	Low strength
Grady	Low strength, wetness
Helena	Low strength, shrink-swell
Herndon	Low strength
Irdell	Low strength, shrink-swell
Johnston	Ponding, flooding
Madison	Low strength
Nason	Low strength
Pacolet	Low strength
Pantego	Wetness
Persant	Low strength
Poindexter	Slope
Rains	Wetness
Rion	Slope
Summerton	Low strength
Toccoa	Flooding
Wehadkee	Wetness, flooding
Winnsboro	Low strength, shrink-swell
Source: USDA, Soil Conservation Service, *Soil Survey of Kershaw County Area, S.C.*, 1989.	

D. **Verification of Thickness** - If there is any question about the actual thicknesses, the contractor shall provide one (1) core per 500 feet of road or a minimum of three (3), whichever is greater. If the actual thickness is less than approved, the substandard areas shall have an overlay of one (1) inch thickness of plant mix or the thickness shortfall plus one-half (0.5) inch, whichever is greater.

Placement of the binder course shall immediately follow placement of the black base (within twenty-four [24] hours) and no traffic shall be permitted on the black base.

E. **Notes on Materials**
1. Aggregate size cannot exceed one-half of the thickness of the individual asphalt course.
2. All materials shall meet SCDOT specifications for quality and gradation.
3. Triple surface treatment is not allowed.
4. Sand clay is not approved for use as a roadway base course unless approved on a case by case basis based on analysis.
5. Surface course shall consist of asphaltic concrete (Type I).

F. **Weather Restrictions** - Plant mix base and binder courses may be placed throughout the year as long as the road is properly prepared and the temperature restrictions utilized by the

SCDOT are met. The Kershaw County Public Works Director must grant specific approval for placement of surface courses during the months of December, January, and February.

G. **Ground Water** - In conditions in which ground water is encountered or may be a potential detriment to the integrity of the road construction, the Public Works Director shall require measurements to mitigate the impact of ground water on the roadbed. Such measures may include, but are not limited to the installation of drainage ditches, the installation of underdrains, and increased thickness requirements for prepared subgrades.

H. **Underdrains** - Subsurface drainage shall be provided in areas having a high water table (particularly in cut areas) to intercept lateral and vertical movement of water which may have a detrimental impact on bearing strength, slope stability, or create an undesirable wet area.

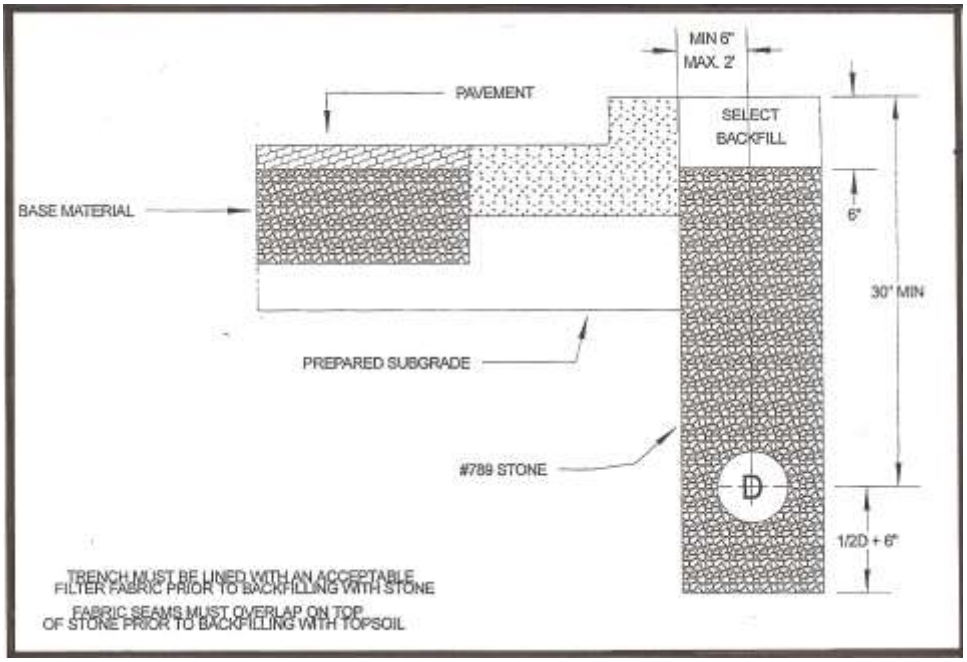

Underdrain

I. **Compaction** - The prepared subgrade and base course shall be compacted to ninety-five (95) percent of a Modified Proctor (ASTM 1557) or 100 percent of a Standard Proctor (ASTM 698) maximum density. A minimum of one (1) proctor for the subgrade and one (1) for the base course shall be provided for each different source of material.
   1. **Subgrade** - The subgrade shall be prepared and compacted to a distance at least eighteen (18) inches beyond the back of curbing.
   2. **Base Course** - The base course shall be prepared and compacted to a distance at least six (6) inches beyond the back of curbing.

J. **Patching and Cuts of Paved Areas** -When patching or cutting of paved areas is required, areas shall be removed in a rectangular shape and, following the placement of approved material, shall be backfilled with macadam compacted in accordance with the compaction requirements of this section. A light coat of tack shall be applied around the edges of the cut out area, and a surface course of the appropriate thickness shall be applied.

K. **Slopes** - Slopes on cut areas and fill areas shall be no steeper than three to one (3:1).

L. **Staking** - The street right-of-way shall be staked at sufficient intervals to check alignment and grade of construction in accordance with the approved engineering plans. Each stake

shall depict station number and cut or fill in formation. The minimum staking interval on both sides of the road shall be 100 feet. Curved areas shall require staking at fifty (50) foot intervals.

M. **Obstructions** - No manmade structure shall be placed within the Kershaw County right-of-way without prior written approval from the Public Works Director through the encroachment permit process. In no case may any structure be placed within five (5) feet of the back of curb or edge of pavement.

N. **Inspections** - Kershaw County personnel periodically and randomly inspect throughout Kershaw County's area of responsibility to ensure that no unauthorized development is occurring. After a development has been approved, County personnel will inspect the site as required to monitor progress, conduct quality control tests, and observe construction procedures. All aspects of the development shall be constructed according to the approved land development plan and specifications. The project is subject to inspection at any time. The developer or his contractor shall notify the County Engineer prior to the installation of any storm drainage systems.

Although an inspector may be aware of the construction progress and arranges to be on-site when appropriate, there are certain stages of road construction which require approval prior to proceeding. A twenty-four (24) hour notice is required to ensure that an inspector will be on-site at the requested time. The stages are as follows:

1. The subgrade shall be approved by a Kershaw County inspector before any base material is placed on the subgrade. In "virgin-cut" areas, proof-rolling can normally be used to check the stability of the subgrade. In fill areas and questionable areas, compaction tests may be required.
2. Where curbing is proposed, a Kershaw County inspector must have approved the subgrade within the proposed curb area prior to placement of the curb.
3. The base material shall be approved by a Kershaw County inspector prior to application of the prime coat. The prime coat and the tack coat on the curb shall be approved prior to placement of the surface coat.
4. A Kershaw County inspector must be present on-site at the start of any paving/surfacing operation.

O. **Testing** - All required compaction and materials tests shall be performed at the expense of the developer and in the presence of the County Engineer or designee. With prior approval and notification, it is acceptable for the developer to use a professional soils engineer to run compaction tests and certify in writing that the County compaction requirements have been achieved. It is still required that a Kershaw County Inspector give a site approval before the construction process continues.

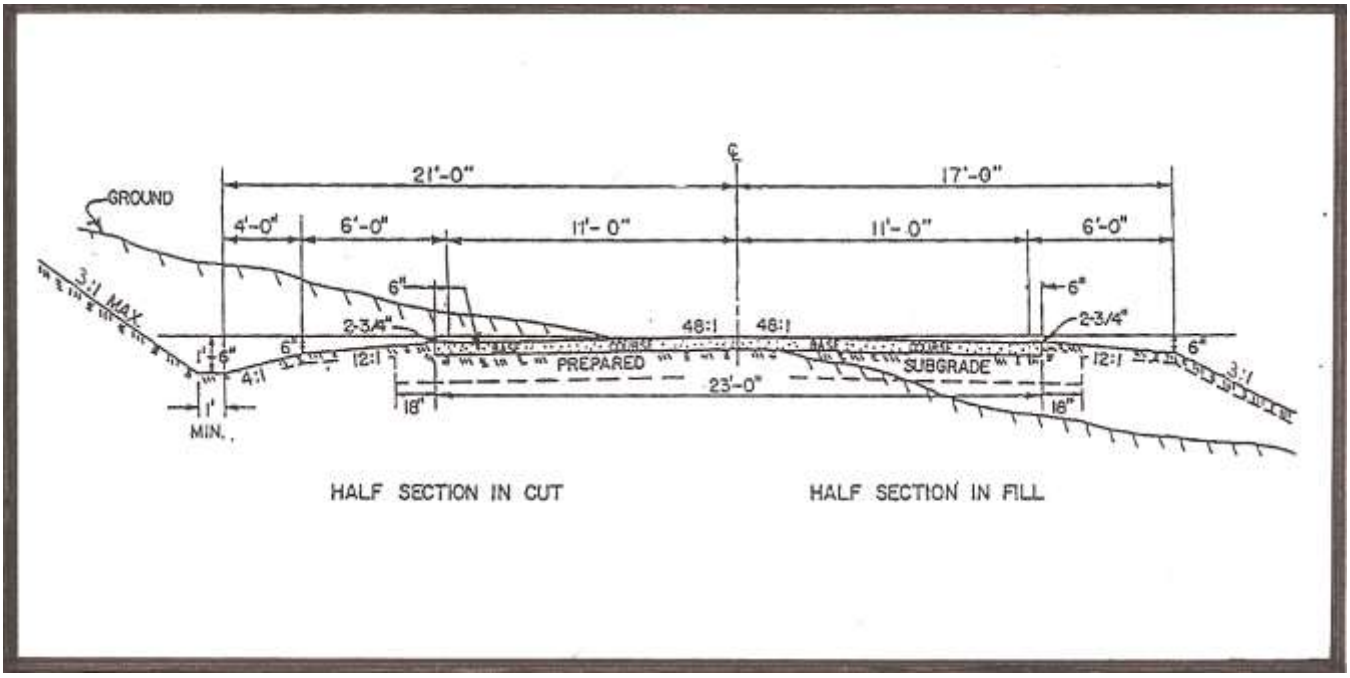

Dirt Road Section with Ditch - 50' Right-of-Way

5:3.8-7 Road Design Standards

A. **Roadway Design Criteria**

Table 5-12 ROADWAY DESIGN CRITERIA		
Item	**Residential Local**	**Residential Collector Light Commercial/Industrial**
Design Speed (mph)	30	40
Minimum Stopping Distance	200 feet	300 feet
Maximum Grade	15%	12%
Minimum Grade	0.5%	0.5%
Minimum Tangent Between Reversing Curves	50 feet	100 feet

B. **Width of Road by Curb Type**

Table 5-13 WIDTH OF ROAD BY CURB TYPE		
Type of Curb Allowed	**Residential Local**	**Residential Collector Light Commercial/Industrial**
With Barrier	25 feet	27 feet
With Rolled	25 feet	36 feet
With No Curb	22 feet	N/A

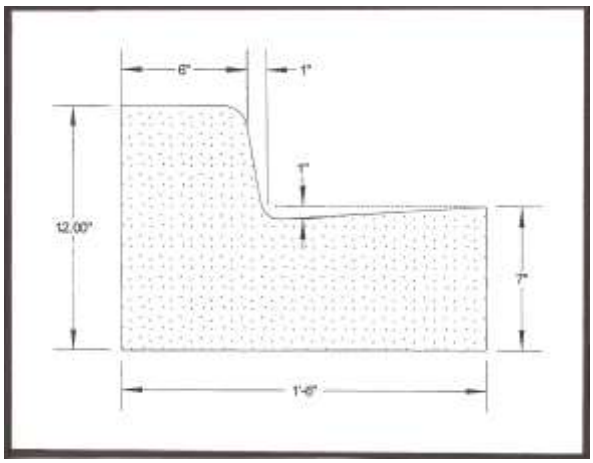

Barrier Curb Detail

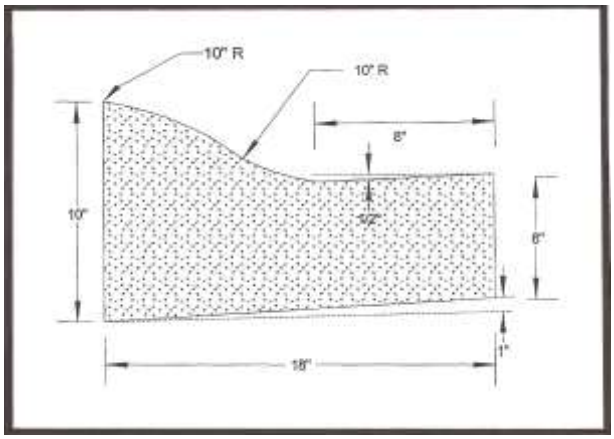

Rolled Curb Detail

C. **Horizontal Curves** - A horizontal curve is required when the roadway alignment has a deflection angle equal to or exceeding ten (10) degrees. Minimum horizontal curve radii are listed below:

Table 5-14 HORIZONTAL CURVE RADII (in feet)		
Average Daily Trips	**Residential Local**	**Residential Collector Light Commercial Industrial**
2-250	110	175
251-500	150	200
501-750	175	225
751-1000	200	250
1001-2000	200	300
2001+	N/A	*
* To be determined by the Public Works Director on a case by case basis.		

A "three-quarter" cul-de-sac (blowout) can be utilized at sharp corners where the minimum horizontal curve radius cannot be achieved and/or there is no road intersection.

D. **Vertical Curves** - All changes in vertical grade, where the algebraic difference exceeds two (2) percent, shall require a vertical (crest/sag) curve. The minimum length of any vertical curve shall be 100 feet. The design shall be based on the AASHTO values below:

Table 5-15 VERTICAL CURVES		
Design Speed	**Sag "K" Value**	**Crest "K" Value**
30 mph	30	20
40 mph	50	50

E. **Superelevation -** RL roads customarily do not require superelevation. In cases where superelevation is utilized on RC/LC/I roadways, the maximum cross slope shall be 0.08 foot per foot. The required length of runoff for the design speed is listed below:

Table 5-16 SUPERELEVATION		
Superelevation Rate (Feet per Feet)	**Length of Runoff (ft.) for Design Speed of 30 mph**	**Length of Runoff (ft.) for Design Speed of 40 mph**
.02	100	125
.04	100	125
.06	110	125
.08	145	170

F. **Additional Design Criteria**

1. **Circulation System Design** - The street system shall be designed to permit the safe, efficient, and orderly movement of traffic; to facilitate pedestrian, bicycle, and other non-automotive transportation modes; to have a simple and logical pattern; to respect natural features and topography; to present an attractive streetscape; and to permit linkage of major collector streets and subdivisions.
2. **Layout and Alignment** - In order to promote the inter-connectivity of subdivision developments and to reduce the use of a major or collector streets for the movement from one subdivision to another, proposed streets shall be coordinated with the street system in the surrounding area and where possible, shall provide for the continuation of existing streets abutting the development.

   All streets shall be opened to the exterior property lines of the development unless permanently terminated by a vehicular turnaround or intersection with another street.
3. **Residential Local Streets** - Residential local streets shall be laid out so that their use by through traffic will be discouraged, but shall encourage use by local vehicular, pedestrian, and bicycle traffic.
4. **Alleys** - Alleys, where provided, shall have a pavement width of not less than eighteen (18) feet, a right-of-way width of not less than forty (40) feet, and shall meet all applicable Kershaw County engineering specifications. Kershaw County will not accept dedication of alleys into the County road system or enter into maintenance agreements for alleys. All alleys shall be privately maintained.
5. **Cul-de-Sacs** - Turnarounds shall be provided at the closed end of a street. The minimum right-of-way radius for a cul-de-sac is fifty (50) feet. If a uniform right-of-way cannot be maintained around the cul-de-sac, there shall be a smooth transition joining the different widths and a minimum of ten (10) feet shall be maintained beyond the edge of the road.

Temporary dead-end streets which extend for a greater distance than the depth of one abutting lot shall be provided with a temporary turn-around. A landscape center island may be provided if accompanied by a permanent maintenance agreement acceptable to the County. If such island is provided, the design shall be in accordance with the engineering design standards of this section.

6. **Dead End Streets** - All dead end streets shall end in a cul-de-sac. Any dead end street which exceeds 1500 feet in length shall have an intermediate turnaround.
7. **Intermediate Turnarounds** - An intermediate turnaround (a half cul-de-sac providing an eighty (80) foot diameter of pavement) can be installed if a road intersection is not desired and the road length exceeds 1500 feet.
8. **Catch Basins** – Catch basins, when utilized, shall be located outside of intersection curve radii, except in extenuating circumstances. Catch basins generally will be located on the uphill side of an intersection in order to collect the runoff before it reaches the intersection.
9. **Water, Sewer, and Other Utilities** - Where it is necessary for utility lines to cross the roadway, the length of encroachment under the roadway shall be minimized. Utility lines should be placed at a ninety (90) degree angle with the road centerline, but in no case less than forty-five (45) degrees. All cross lines shall be compacted in accordance with this section. Where practicable, manholes shall be located outside of the pavement area. No valves or other structures shall be located within the pavement area.
10. **Street Access** - Each residential collector road shall have either at least two (2) access points to roads of equal or higher classification, or substantial improvement approved by the Public Works Director to accommodate the projected traffic flow. These substantial improvements may include acceleration lanes, deceleration lanes, stop lights, etc.
11. **Access Restrictions** - A residential collector shall provide no direct residential access if the twenty-seven (27) foot roadway is utilized. If residential access cannot be avoided, then the thirty-six (36) foot roadway with rolled curb shall be provided.

    Major residential subdivisions, where proposed locations are adjacent to arterial streets, shall be denied direct access to the arterial street, and shall be separated from such streets by double frontage lots accessing onto reverse frontage roads. Elsewhere, the Planning and Zoning Commission may require marginal access streets, deep lots, or such other treatment as may be necessary for adequate protection of residential properties, and to afford the separation of through traffic from local residential or commercial traffic.

12. **Residential Reverse Frontage Lots** - Residential reverse frontage lots shall have a minimum rear yard of fifty (50) feet next to the arterial street, measured from the shortest distance of the proposed back building line to the street right-of-way. They shall also, within such rear yard and immediately adjacent to the right-of-way, have a non-access planting screen easement of at least thirty (30) feet in depth planted to Type “D” Buffer requirements per this Ordinance.
13. **Left Turn Lane** - A left turn lane shall be provided for any road with an ADT of 2000 or greater. A left turn lane may be required on roads with lesser ADT if demonstrated necessary by a traffic management plan. Turning lanes may be required on lesser ADT roads which access arterials and/or certain collector roadways. The turning lane shall have a minimum length of fifty (50) feet and a smooth transition to the typical road section.

14. **Concrete Keys** - A concrete key, twelve (12) inches wide and twelve (12) inches deep, shall be placed at the end of any pavement section expected to be extended or at the request of the Public Works Director or County Engineer.

5:3.8-8 Intersection Design

A. **General -** Distance between street intersections shall normally be sufficient to allow two (2) tiers of lots. In extenuating circumstances, where double frontage lots occur, the lots shall have access limited to the lesser classification road.

Table 5-17 INTERSECTION DESIGN	
Item	**Value**
Minimum Angle of Intersection	75 degrees
Maximum Grade Approaching an Intersection	5%
Minimum Tangent Length (to end of pavement) Approaching an Intersection	RL: 50 feet RC: 100 feet LC/I: 100 feet
Minimum Return Radius (to end of pavement or back of curb)	RL to RL: 25 feet RL to RC/LC/I: 30 feet RC/LC/I to RC/LC/I: 50 feet Entering a cul-de-sac: 50 feet
Minimal Centerline Offset to Adjacent Intersection	RL to RL: 150 feet RL to RC/LC/I: 175 feet RC/LC/I to RC/LC/I: 200 feet
RL = Residential Local RC = Residential Collector LC = Light Commercial I = Industrial	

Drainage at Intersections - At intersections where there are no catch basins at each radius, the engineer shall provide an enlarged detail of the intersection and show spot elevations at critical points. The provided information shall be sufficient to provide construction guidance and prove that positive drainage will be achieved.

B. **Visibility at Intersections** - Railroad, street, and driveway intersections shall be unobstructed for the vision of motorists, pedestrians, and other possible users. No plantings or vegetation shall be placed or maintained, and no sign, fence, building, wall, or other structure shall be located in a visual clearance area within an intersection site triangle or a driveway sight triangle as defined below. The Public Works Director shall make a determination of compliance with visibility at intersections, if required.

1. **Visual Clearance Area** - An area with a height of between two and one-half (2½) feet and ten (10) feet, measured from the upper edge of the curb or pavement, and located within an intersection or driveway sight triangle, where no sign, planting, fence, building, wall, or other structure shall be located. Exception: Poles and support structures less than twelve (12) inches in diameter may be permitted in such areas.

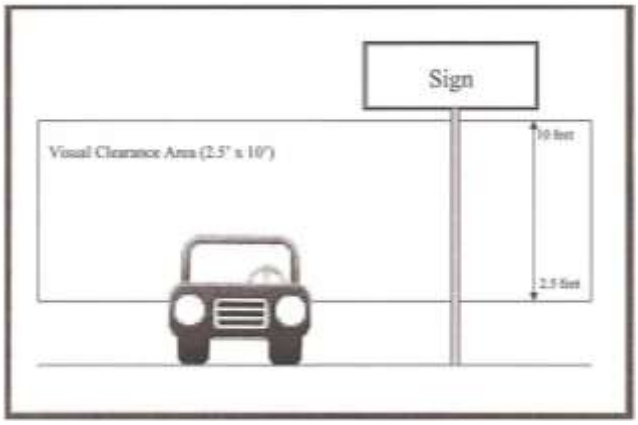

Visual Clearance Area

2. **Sight Triangle -** A triangular area, measured from the curb or edge of pavement, created by a line connecting points on the front and side for lines at a determined distance from the intersection of said lines or the extension of said lines. The following two types of sight triangles are used in this Ordinance:
   a. **Intersection Sight Triangle -** A triangle established by multiplying the speed limit of the road which is being accessed by ten (10). The sight distance for a speed limit of 35 MPH would be 350 feet at the intersection. The resulting intersection sight distance triangle is determined by measuring from a point fifteen (15) feet from the edge of pavement of the road being accessed to the points providing the minimum intersection sight distance in each direction.

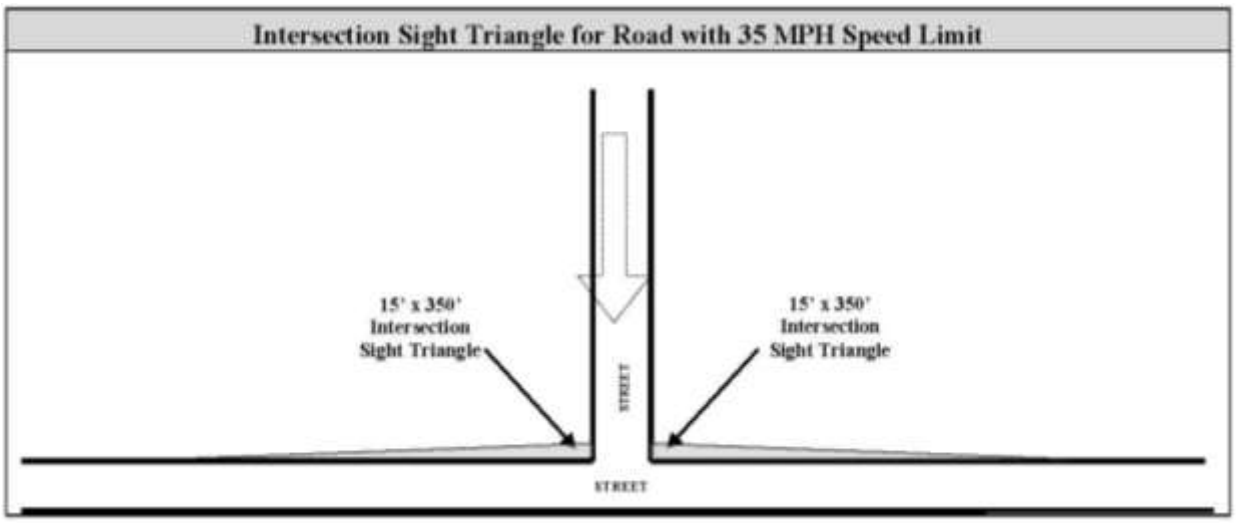

   a. **Driveway Sight Triangle -** The driveway sight triangle is one that is measured ten (10) feet along the driveway and ten (10) feet along the edge of pavement. In the event that parking is allowed adjacent to the curb, ten (10) feet will be measured along the edge of the driveway and ten (10) feet along the edge of the lane of traffic. In the event that a driveway crosses a sidewalk, ten (10) feet will be measured along the driveway and ten (10) feet along the edge of the sidewalk. Refer to illustrations in the sign measurement provisions of this Ordinance.

Driveway Sight Triangles for Streets with No Parking Spaces or Sidewalks

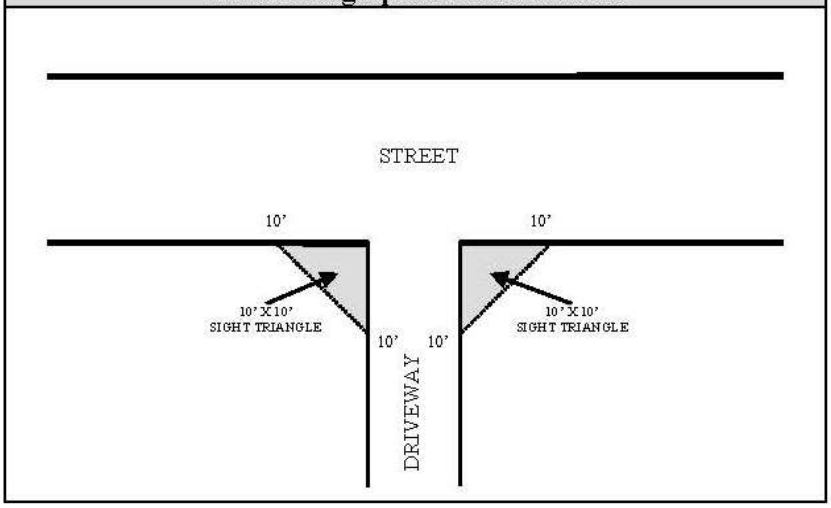

Driveway Sight Triangles for Streets with Parking Spaces

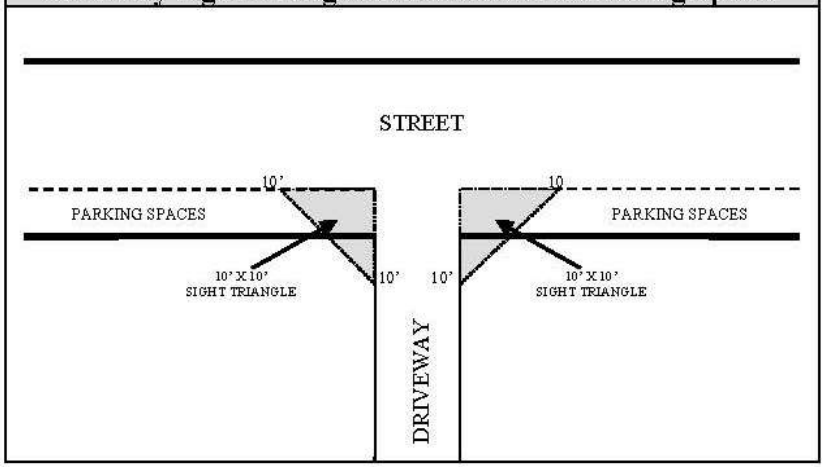

Driveway Sight Triangles for Streets with Sidewalks

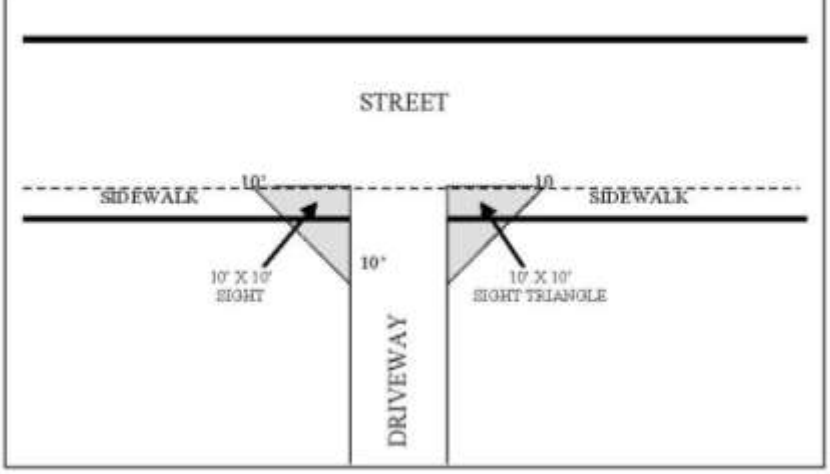

C. **Additional Sight Criteria**

Table 5-18 ADDITIONAL SIGHT MEASUREMENTS	
Criteria	**Height Above Road Surface**
Height of Driver's Eye	3.5'
Stopping Sight Distance Object	0.5'
Intersection Site Distance Object	4.25'

5:3.8-9 Road Entrance Islands and Medians

A. An entrance island shall not encroach on the existing road's right-of-way and shall be located a minimum of fifteen (15) feet from the edge of the pavement of the existing road.
B. The island shall end before the location of the first driveway for the planned lots on each side of the island.
C. There shall be a minimum width of fifteen (15) feet of roadway for one-way traffic on each side of the island, measured from back of curb to back of curb.
D. Any vegetation or structure located within the island shall not interfere with the sight distance requirements. Any plantings and/or structures within the island shall not be the perpetual maintenance responsibility of Kershaw County.
E. If deemed necessary by the Public Works Director, a marked warning area shall be installed a minimum of fifteen (15) feet in advance of the island on RC/LC/I roadways. The specifications for these marked warning areas shall be according to the current addition of the *South Carolina Manual on Uniform Traffic Control Devices.*
F. Within the island area, provisions shall be made to ensure positive drainage and/or infiltration. If irrigation or sprinkler systems are proposed, tile underdrains shall be required.
G. Where the Public Works Director has concerns relating to traffic flow, traffic control signs shall be required. The specifications for the traffic control signs will be according to the current addition of the *South Carolina Manual on Uniform Traffic Control Devices*.

5:3.8-10 Cul-de-Sac Islands

A. Any vegetation or structure located within the island shall not interfere with the sight distance requirements. Any plantings and/or structures within the island shall not be the perpetual maintenance responsibility of Kershaw County.
B. There shall be a minimum width of twenty (20) feet of roadway for one-way traffic around the perimeter of the island, measured from back of curb to back of curb.
C. Minimum inside curb radius shall be twenty-five (25) feet with a minimum radius of five (5) feet for the nose of the island. The minimum outside curb radius shall be forty-five (45) feet with a return radius of fifty (50) feet.
D. If deemed necessary by the Public Works Director, a marked warning area shall be installed a minimum of fifteen (15) feet in advance of the island on RC/LC/I roadways. The specifications for these marked warning areas shall be according to the current edition of the *South Carolina Manual on Uniform Traffic Control Devices.*
E. Horizontal and vertical alignment of the roadway shall be in accordance with the minimum stopping sight distance requirements as determined by the design speed.
F. Within the island area, provisions shall be made to ensure positive drainage and/or infiltration. If irrigation or sprinkler systems are proposed, tile underdrains shall be required.
G. Where the Public Works Director has concerns relating to traffic flow, traffic control signs shall be required. The specifications for the traffic control signs shall be according to the

current addition of the *South Carolina Manual on Uniform Traffic Control Devices*. **Note**: A dead end traffic control sign shall not be required in circumstances where the end of the cul-de-sac is clearly visible from the intersection.

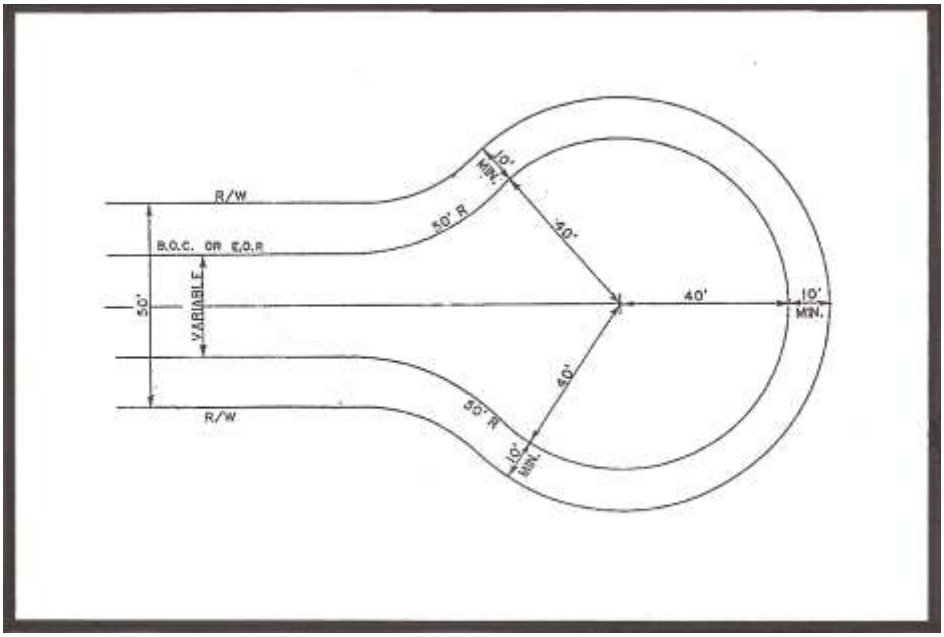

Cul-de-Sac Design Standards

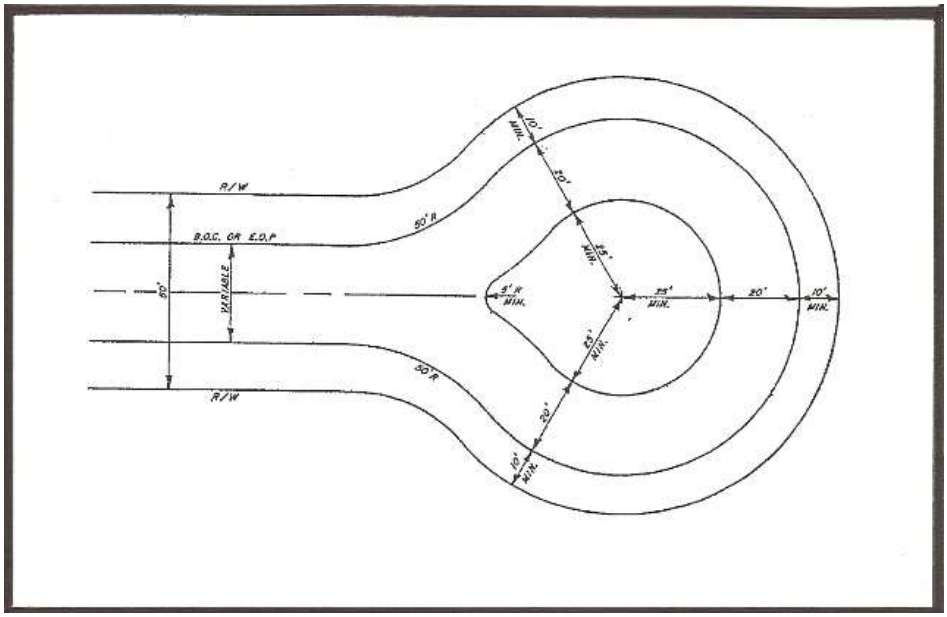

Cul-de-Sac with an Island

5:3.8-11 Shoulders

Shoulders shall consist of stabilized turf or other material acceptable to the Public Works Director, and shall be prepared in compliance with Section 209 of the *Standards Specifications Manual* previously referenced.

5:3.8-12 Street Signs

A. Design and placement of traffic signs shall follow State regulations or the requirements specified in the *Manual of Uniform Traffic Control Devices for Streets and Highways*, published by the U.S. Department of Transportation. Responsibility for the cost of the signs shall rest with the developer.

B. At least one street name sign shall be placed at each street intersection. Signs shall be installed under streetlights, and where possible, free of visual obstruction. The design of street name signs shall be uniform in size and color, and shall be subject to approval by the Public Works Director.

5:3.8-13 Street Names

The Kershaw County Planning and Zoning Commission devolves the responsibility of approval of new street names to of Kershaw County 911 Addressing. Proposed street names shall be substantially different in sound and spelling from existing streets in the County unless at a future date, plans call for a tie-in between the proposed street and an existing street. Where such streets are in obvious alignment with an existing street, it shall be given the same name as the existing street.

5:3.8-14 Blocks

A. **Residential**
   1. Block lengths shall be appropriate to topographic conditions and density to be served, but shall not exceed 1,000 feet in length, or be less than 300 feet in length.
   2. Blocks should be of sufficient width to allow for two tiers or lots of appropriate depth, except where reverse frontage lots are required along a major street, or where prevented by size, topographical conditions, or other inherent conditions of the property.

B. **Commercial and Industrial**
   1. Blocks intended for commercial or industrial development may vary from the standards of design detailed above in favor of dimensions more suitable to their prospective use; provided such blocks permit adequate traffic circulation.

5:3.8-15 As-Built Engineering Plans

Upon completion of any project involving infrastructure (roads, storm drainage systems with structures, closed pipes, ponds, etc.) and prior to final plat approval, Kershaw County requires the submittal of as-built engineering plans and calculations. As applicable, the following information shall be submitted on or with the as-built engineering plans:

A. **General**:
   1. The subdivision name and the approved road names.
   2. The developer's name, address, and contact information.
   3. The engineer's and surveyor's name, address, and contact information.
   4. The contractor's name, address, and contact information.
   5. The scale of the engineering plans accompanied by a bar scale.
   6. Depiction of the locations and elevations of the benchmarks on the project.
   7. Depiction of any wetlands and/or designated waters of the state (WoS).

B. **Roadways**:
   1. A copy of the asphalt tickets.

2. A copy of the rock tickets.
3. A copy of the seeding tickets.
4. Pavement widths on the plan view.
5. A typical roadway cross-section.
6. A detail of the roadway with base and surface thicknesses.
7. A plan view of the roadway with centerline stationing and geometric data.
8. Horizontal and vertical curve information.
9. A profile of the roadway with centerline elevations.
10. Right-of-way widths on the plan view. Metes and bounds for the right-of-way shall be provided.
11. Utility elevations at all road crossings on the roadway profile.

C. **Storm Drainage Systems**:
1. The location of all storm drainage structures and utilities.
2. All storm drainage and utility easements.
3. Storm drainage profile with all relevant elevations.
4. Detention/retention pond information (stage-storage-discharge values).
5. A drawing of the outlet structures and spillways with elevations and dimensions.
6. Details of the storm drainage structures.

5:3.9 Driveway Standards

5:3.9-1 Definition of Driveway

Driveway- A paved or unpaved area used for ingress or egress of vehicles, and allowing access from a street to a building, lot, structure, or facility that provides access to no more than three (3) parcels of land. Access to multiple parcel group developments is excluded from the three parcel restriction.

5:3.9-2 Driveway Width

The width in feet of a driveway approach shall be within the minimum and maximum limits as specified below, excluding detached single-family residential properties. Driveway approach widths shall be measured at the road right-of-way line and the width of any driveway shall not increase when crossing the right-of-way except at properly designated curb returns.

A. **One-Way Drives** - One-way drives shall have a minimum width of twelve (12) feet and shall not exceed a maximum width of eighteen (18) feet.
B. **Two-Way Drives** - Two-way drives shall have a minimum width of eighteen (18) feet and shall not exceed a maximum width of twenty-four (24) feet.

5:3.9-3 Number of Drives

A. Generally, one point of access to a given property will be allowed as long as it is situated in a safe location and in accordance with other provisions of this Ordinance. Additional access points, however, may be allowed if driveway spacing requirements can be met.
B. Driveways shall be limited to the number needed to provide adequate and reasonable access to a property. Factors such as alignment with opposing driveways and minimum spacing requirements will have a bearing on the number of driveways approved. A property with more than one (1) frontage may have the frontages considered separately.

5:3.9-4 Joint Use of Driveways/Connectivity

For commercial areas, where feasible, development plans shall require the establishment of a joint use access driveway serving two (2) or more abutting properties. Additionally, when a property is developed, the Planning Official or Planning and Zoning Commission, as applicable, may require connectivity with adjoining parking areas or may require that a driveway/parking area be designed for future connection with an abutting property. Joint use driveways for residential developments may be utilized to meet the driveway spacing standards.

5:3.9-5 Driveway Separation

All driveway approaches shall be allocated and spaced per SCDOT minimum spacing standards as outlined below.

A. **Driveway Spacing Requirements for County Roads**

Access separation between driveways shall be measured from near edge to near edge of adjacent drives. Speed limits are as determined by SCDOT. Refer to the following table:

Table 5-19 COUNTY ROAD DRIVEWAY SPACING REQUIREMENTS

Road Speed Limit (mph)	Minimum Spacing (ft.) ≥ 2000 Average Daily Trips
30 or less	160 feet
35	220 feet
40	275 feet
45	325 feet
≥ 50	400 feet

B. **Exceptions**

1. Internal residential access streets (residential local) in subdivision developments are exempt from these standards.
2. For individually developed single-family lots, the Planning Official or Planning and Zoning Commission, as applicable, may reduce the spacing requirements of this section if it can be demonstrated that a hardship exists and there is no opportunity to design a conforming access point.
3. Minimum spacing may be increased if right-turn deceleration lanes are provided.
4. A pair of one-way drives may be substituted only if the internal circulation on the site is compatible with the one-way driveways. Nowhere shall a distance of less than forty (40) feet between edges of one-way drives be permitted.
5. A replacement of a driveway not meeting the minimum spacing requirements is allowed if lost or disrupted due to a County road project.

5:3.10 Underground Wiring

5:3.10- 1 Where Required

All electric, telephone, television, or other communication lines (both main and service connections) servicing new major subdivisions shall be provided by underground wiring within easements or dedicated public rights-of-way, installed in accord with the prevailing standards and practices of the utility or other companies providing such services.

Lots that abut existing easements or public rights-of-way on existing streets and roads where overhead electric or telephone distribution supply lines and service connections have previously been installed may be supplied with electric and telephone service from those overhead lines, but should a road widening or an extension of service or other such condition occur as a result of development and necessitate the replacement or relocation of such utilities, such replacement or relocation shall be underground.

5:3.10-2 Exceptions

Where conditions are such that underground wiring is not practical, the Planning and Zoning Commission may make an exception, provided the placement and alignment of poles shall be designed to lessen the visual impact of overhead lines; that clearing swaths through treed areas shall be avoided by selective cutting and staggered alignment; that trees shall be planted in open areas and at key locations to minimize the view of poles and alignments; and that alignments shall follow rear lot lines and other alignments, as practical.

5:3.11 Gate Access Standards for Gated Communities

As of the effective date of this Ordinance, all new gated communities shall comply with the following regulations:

A. **Ingress/Egress Width** - The ingress/egress for fire service and emergency vehicles shall be at least twelve (12) feet in width.
B. **Distance Between Gate and Right-of-Way** - There shall be a minimum of forty (40) feet measured from the gate to the ultimate right-of-way so that fire trucks and emergency vehicles do not block the adjacent public right-of-way.
C. **Radio Transceiver Access Control** - All electrical vehicular gates shall be equipped with access control using a radio transceiver for public safety and authorized users. The transceiver will allow emergency vehicles to open the gate from a mobile or portable radio. Kershaw County authorizes Click2Enter, Inc. to provide this device. Any type of device from a company other than Click2Enter, Inc. shall be approved by the Kershaw County Fire Marshal.
D. **Fail-Open Device Required** - All electrical vehicular gates shall be provided with a fail-open device. Gates shall be in the open position during a power failure and shall remain so until power is restored.
E. **Switch Key Required** - In order for the appropriate personnel to enter in the event of an emergency, a switch key shall be installed to allow emergency personnel access through all vehicular gates. Kershaw County authorizes the Knox Company to provide this device. Any type of device from a company other than the Knox Company shall be approved by the Kershaw County Fire Marshall.
F. **Lock Box Required** - In order for the appropriate personnel to enter in the event of an emergency, an approved lock box shall be installed to allow emergency personnel access through all pedestrian gates. Kershaw County authorizes the Knox Company to provide this device. Any type of device from a company other than the Knox Company shall be approved by the Kershaw County Fire Marshall.
G. **Swing-Type Gates** - Swing-type vehicular gates shall be designed so that, when fully opened, they do not obstruct the path of travel for vehicles and pedestrians.
H. **Roll-Type Gates** - Roll-type gates shall not be designed in a manner that when open, would block vehicular or pedestrian paths of travel.

I. **Multiple Gates** - All gates within in any single development shall be operated in the same fashion.

J. **Notification of Activation or Deactivation** - Gate activation shall not be altered nor shall gates be placed out of service without prior notification to the Kershaw County Fire Service and Sheriff's Department.

K. **Failure to Comply** - Any existing or proposed community failing to meet the above listed requirements shall not be allowed gated entrances.

5:3.12 Utility Easements and Rights-of-Way

A. **Utility Easements** - Adequate areas of suitable size and location shall be allocated for utility easements. The location and size of such easements shall be coordinated with the public and private utilities involved.

Where provided along side or rear lot lines, utility easements shall be not less than twenty (20) feet in width. No vegetative screening or fencing required by the buffering, screening, open space, and landscaping regulations of this Ordinance shall be planted or installed inside utility and drainage easements, excluding overhead easements, without the consent of the Planning Official and the easement holder. If plantings or fences inside utility or drainage easement areas are allowed, these plantings and fences shall be maintained in accordance with the terms of consent and any applicable maintenance provisions of this section. Any tree planted within the right-of-way of overhead utility lines shall be a small-maturing tree of a mature height of no greater than fifteen (15) feet.

B. **Kershaw County Sewer Easements and Rights-of Way**

1. **Dedication of Right-of-Way** - The developer may dedicate sewer line rights-of-way to Kershaw County. The proposed locations of Kershaw County public sewer rights-of-way shall be approved by the Kershaw County Utility Director. Where provided along side or rear lot lines, utility easements shall be not less than twenty (20) feet in width. The sewer line right-of-way shall be shown on the construction plans, as built plans, and on the final plat. The sewer line and right-of-way shall be dedicated to Kershaw County through the Certification of Ownership and Dedication per the final plat submittal requirements of this Article and is repeated herein:

   a. **Certificate of Ownership and Dedication**

   It is hereby certified that I am (we are) the owner(s) of the property shown and described hereon and that I (we) hereby dedicate said streets; walks; parks; rights-of-way; sewer lines to include manholes and manhole castings, fittings and other components, and service lines to the right-of-way boundaries; and other sites to public use as specifically noted hereon. It being understood that I (we) hereby warrant said facilities and agree to bear any costs associated with correcting any defects in said facilities for a period of one (1) year from the date of final plat approval.

_____	_____
Date	Owner
_____	_____
Date	Owner

b. **Use of Right-of-Way** - The right-of-way shall be for the exclusive use of Kershaw County. No vegetative screening or fencing required by the buffering, screening, open space, and landscaping regulations of this Ordinance shall be planted or installed inside the Kershaw County public sewer right-of-way without the consent of the Planning Official and the Utilities Director. The Planning and Zoning Commission or Planning Official, as applicable, may approve the installation of sidewalks, trails, and greenways as required in this Article within the Kershaw County public sewer rights-of-way. All proposed sidewalks, trails, and greenways including any proposed hardscaping shall have approval from the Utilities Director prior to sketch plan or site plan submittal to the Planning Official or Planning and Zoning Commission, as applicable. However, the County reserves the right to dig up, remove, or destroy any buildings, fences, sidewalks, driveways, entranceways, and other structures allowed within the right-of-way for the purpose of maintaining, inspecting, and operating the sewer facilities. The County shall, in connection with such action, take reasonable precaution not to damage or move said structures, but shall not be held liable for damages.

2. **Sewer Line Easements** - The developer (grantor) may grant sewer line easements to Kershaw County. Where provided along side or rear lot lines, utility easements shall be not less than twenty (20) feet in width. Ownership of the easement shall remain with the property holder. However, no construction within the sewer easement, including buildings, fences, sidewalks, driveways, entranceways, and other structures shall be allowed within the boundaries of the easement without prior approval of the Utilities Director.

   The sewer facilities installed within the easement shall remain the property of Kershaw County. The County shall have the right to maintain, inspect, rebuild, remove, repair, improve, and relocate within the easement, and to make such changes, alterations, substitutions, additions to or extensions of its facilities, including the right to increase the size and number of pipes and manholes. However, the County shall, in connection with such action, take reasonable precaution not to damage or move the facilities of the easement grantor.

   All rights reserved to the grantor of the easement shall be subject at all times to the paramount right of the County to dig up, remove, or destroy any buildings, fences, sidewalks, driveways, entranceways, and other structures belonging to the grantor for the purpose of maintaining, inspecting, and operating the sewer facilities. Any shrubbery, fence, or other structure placed in the sewer easement shall be done at the risk of the property owner and the County shall not be held responsible for damages done to any structure, shrubbery, or fence resulting from the utility having to make excavations or openings in the utility easement.

   In addition to the grant of easement, the grantors shall grant to the County during the period of construction and during any subsequent period in which maintenance, inspection, repairs, or reconstruction of the sewer system may be necessary, the right of using land abutting the easement as may be necessary for the placement of materials excavated from the easement and to bring in lines and equipment. The County shall restore damages resulting from said uses of land abutting the easement.

a. **Sewer Easement Certification -** The following certification, as applicable, shall be included on all construction plans and final plats submitted for approval:

The Party of the First Part, hereinafter called "Grantor," does hereby grant, bargain, sell, release and convey unto Kershaw County, hereinafter called "Grantee," its successors and assigns, sewer lines and appurtenances incidental thereto including but not limited to pipes, manholes and fittings and other components comprising the sewer system as shown on hereon, in fee simple, together with an exclusive easement, twenty (20) feet in width together with the right during the course of operation, construction, and/or maintenance to use such additional width as may be necessary on either side of the aforesaid right-of-way herein granted, for the purpose of operation, construction, and/or maintenance of said sewer lines and appurtenances through and under the lands hereon described, together with the right of ingress and egress across said property at all times, and the right to excavate and refill ditches and/or trenches, and the further right to remove trees, bushes, undergrowth, crops and/or other obstructions interfering with the operation, construction and/or maintenance of said sewer lines and appurtenances. The grantor hereby agrees that no construction (including, but not limited to, buildings, paving, pipe lines or other utilities) will be allowed within the limits of this easement without the prior approval of Kershaw County.

_____ Date _____Owner (Grantor)

_____ Date _____Owner (Grantor)

C. **Storm Drainage Pipe Easements**- Storm drainage pipe easements shall provide adequate area for maintenance equipment to operate. Some typical easements are listed below:

Table 5-20 DRAINAGE EASEMENT WIDTH PER PIPE SIZE AND DEPTH		
Maximum Pipe Size	**Maximum Depth to Invert**	**Width of Easement**
18"	3.5'	20'
24"	5.0'	24'
36"	6.0'	30'
54"	7.0'	36'

D. **Stormwater Open Channel Easements** - The minimum easement width for an open channel/ditch is twenty-four (24) feet. For channels in excess of four (4) feet in width and/or four (4) feet in depth, the easement width shall be increased by two (2) feet for each additional foot of width and/or depth or width of the channel plus twenty (20) feet, whichever is wider.

E. **Detention Pond Easements** - An access easement of twenty (20) feet minimum shall be provided to the pond access gate. The entire pond and sufficient access on the top of the circumference of the pond shall be included as part of the drainage easement.

5:3.12-1 Maintenance of Easements and Rights-of Way

A. **Maintenance of Easements** - Easements shall be maintained by the property owner(s) and may be used to satisfy yard requirements unless specifically accepted for public maintenance by the County or utility with lines in such easement.

   Covenant restrictions placed in the deed of a lot which contains a utility easement shall stipulate that the County, municipal, or other utility provider with lines in such easement shall have full right of access.

B. **Maintenance of Kershaw County Sewer Rights-of-Way -** Public sewer right-of-way dedicated to Kershaw County shall be maintained by Kershaw County.

C. **Maintenance of Sewer Easements granted to Kershaw County -** The easement grantor shall grant to Kershaw County the right of maintenance of the easement and sewer facilities as stated above.

5:3.13 Surveys and Markings

All land developments within the jurisdiction of this Ordinance shall be surveyed, platted, and marked in accord with the *Minimum Standards Manual for the Practice of Land Surveying in South Carolina*, as promulgated by the Code of Laws of South Carolina, 1976, Title 40, Chapter 21. This Manual is hereby adopted by reference and is as much a part of this Ordinance as if contained herein.

5:3.14 Sidewalks and Paths

Sidewalks, paths, trails, and/or greenways designed to accommodate pedestrian, bicycle, and other non-automotive traffic shall be provided in all major residential subdivisions, major group developments, and Planned Development Districts. The system of sidewalks, paths, trails, greenways, or combination thereof shall be designed such that every lot in the development or building in a group development has access to the system. Connectivity of the system to nearby schools, businesses, institutions, and other facilities shall be provided as applicable and practicable. The proposed system design shall be approved by the Planning and Zoning Commission at the plan review per the provisions of this Ordinance.

ARTICLE 6 ADMINISTRATION

6:1 ADMINISTRATION OF ORDINANCE

6:1.1 Planning Official

The County Administrator shall appoint the Planning Official who is hereby charged with the administration of this Ordinance subject to the provisions of the South Carolina *Home Rule Act*. Planning Official means the Kershaw County Planning and Zoning Director or his designated Building Official or other Planning and Zoning Department official designated by the Planning and Zoning Director to administer the provisions of this Ordinance. As of the effective date of this Ordinance, the following shall apply:

A. No plat for the subdivision of land within the unincorporated area of Kershaw County shall be filed with or recorded by the Kershaw County Register of Deeds until such plat shall have first been submitted to and approved by the Planning Official of Kershaw County, according to procedures set forth in this Ordinance.
B. No permit to develop, construct, or otherwise change land characteristics in the unincorporated area of Kershaw County shall be issued except in compliance with all applicable provisions of this Ordinance and the current and applicable building codes.
C. No street or other public way or land shall be accepted or maintained, nor shall any water lines, sewerage, street lighting, or similar improvements be extended or connected, nor shall any permit be issued by any department of the County for construction of any building or other improvement in any subdivision established hereafter which has not been approved by the Planning and Zoning Commission or the Planning Official, as applicable, per the provisions of this Ordinance.
D. No building, structure, or sign or any part thereof shall be erected, added to or structurally altered, nor shall any excavation or grading be commenced until the required permits have been issued.
E. No building, structure, or land shall be used or occupied; nor shall any building, structure, or land be converted, wholly or in part to any other use, until all applicable and appropriate permits, registrations, and certifications have been issued certifying compliance with the requirements of this Ordinance.
F. No permits inconsistent with the provisions of this Ordinance shall be issued unless accompanied by an approved variance or exception as provided by this Article. Refusal by the Planning Official to issue a required permit shall be stated in writing with cause.

6:1.2 Board of Zoning Appeals

The Board of Zoning Appeals was established under Article 9, Section 9-9 of the Zoning Ordinance of Kershaw County as amended, and is hereby continued as follows:

Said Board shall consist of five (5) members each, who shall be citizens of Kershaw County, and appointed by the Kershaw County Council for overlapping terms of four (4) years. Any vacancy in the membership shall be filled for the unexpired term in the same manner as the initial appointment, and any member may be removed by the County Council for cause after a public hearing. Members shall serve without pay, but may be reimbursed for any expenses incurred

while representing the Board. Members cannot hold any other pubic office or position in the appointing local government (Kershaw County).

6:1.2-1 Proceedings of the Board of Zoning Appeals

The Board of Zoning Appeals shall elect a Chairperson and a Vice-Chairperson from its members, who shall serve for one year, or until re-elected. The Board shall appoint a Secretary, who may be a governmental officer or a member of the Board of Zoning Appeals. The Board shall adopt rules of procedure in accordance with SC Code of Laws §6-29-790. Meetings of the Board shall be held at the call of the respective Chairperson and at such other times as the Board may determine. All meetings shall be open to the public. A quorum shall be required to take any official action, with three members present constituting a quorum.

6:1.2-2 Appeals to the Board of Zoning Appeals; Hearings and Notices

The purpose of an appeal of administrative action is to allege that there is an error, requirement, decision, or determination made by the Planning Official that is in contradiction to a provision or regulation of Article 3, Zoning Regulations, of this Ordinance. The petitioner shall state the specific provision or regulation of Article 3 of this Ordinance upon which the appeal of administrative action is based. Appeals of administrative action to the Board shall be taken within thirty (30) days of the date of the action which is appealed, by filing notice of appeal with the Planning Official, who shall forthwith transmit to the Board all the papers constituting the record upon which the action appealed was taken.

An appeal stays all legal proceedings in furtherance of the action appealed from, unless the Planning Official from whom the appeal is taken certifies to the Board, after the notice of appeal shall have been filed with him/her, that by reason of facts stated in the certificate, a stay would, in his/her opinion, cause imminent peril to life and property. In such case, proceedings shall not be stayed except by a restraining order which may be granted by the Board or by a court of record on application, on notice to the Planning Official, and on due cause shown. The Board of Zoning Appeals shall fix a reasonable time for the hearing of the appeal or other matter referred to it, and give at least fifteen (15) days public notice thereof in a newspaper of general circulation in the community, as well as due notice to the parties of interest, and decide the same within a reasonable time. Normally, all petitions to the Board for a hearing should be filed at least thirty (30) days from the next regularly scheduled meeting of the Board to allow Staff adequate time to prepare the case and to give public notice. At the hearing any party may appear in person or by agent or by attorney. A sign shall be erected on the property stating the nature of the appeal or variance.

6:1.2-3 Powers and Duties of the Board of Zoning Appeals

The Board of Zoning Appeals shall have the following powers and duties:

G. **To Hear and Decide Appeals, Generally** - To hear and decide appeals where it is alleged there is error in any order, requirement, decision, or determination made by the Planning Official in the enforcement of Article 3 of this Ordinance.
H. **To Grant Variances, Generally** - To authorize upon appeal in specific cases a variance from the terms of Article 3 of this Ordinance as will not be contrary to the public interest where, owing to special conditions, a literal enforcement of the provisions of Article 3 of this Ordinance will, in an individual case, result in the unnecessary hardship so that the spirit of the Ordinance shall be observed, public safety and welfare secured, and substantial justice

done. Such variance may be granted in such individual case of unnecessary hardship if the Board makes and explains in writing all the following findings:

1. There are extraordinary and exceptional conditions pertaining to the particular piece of property; and
2. these conditions do not generally apply to other property in the vicinity; and
3. because of these conditions, the application of the Ordinance to the particular piece of property would effectively prohibit or unreasonably restrict the utilization of the property; and
4. the authorization of a variance will not be of substantial detriment to adjacent property or to the public good, and the character of the district will not be harmed by the granting of the variance.

I. The Board may not grant a variance, the effect of which would allow the establishment of a use not otherwise permitted in a zoning district, to extend physically a nonconforming use of land, or to change the zoning district boundaries shown on the Official Zoning Map. The fact that property may be utilized more profitably, should a variance be granted, may not be considered grounds for a variance.

J. To grant variances in the Airport Overlay District(s) (AOD). Any person desiring to erect or increase the height or size of any structure not in accordance with the regulations prescribed in the airport overlay district regulations in Article 3 of this Ordinance may apply for a variance from such regulations. The application for a variance shall be accompanied by a determination from the Federal Aviation Administration as to the effect of the proposal on the operation of air navigation facilities and the safe, efficient use of navigable airspace.

Additionally, no application for an AOD variance may be considered by the Board of Zoning Appeals unless a copy of the application has been furnished to the Chairman of the Kershaw County Airport Commission for advice as to the aeronautical effects of the variance. If the Airport Commission does not respond to the application within fifteen (15) days after receipt, the Board of Appeals may act on its own to grant or deny the application for a variance.

Any permit or variance granted, if such action is deemed advisable to effectuate the purpose of this Ordinance and is reasonable in the circumstances, may be so conditioned as to require the owner of the structure in question to install, operate, and maintain, at the owner's expense, such markings and lights as may be deemed necessary by the Federal Aviation Administration, the South Carolina Aeronautics Commission, or the Kershaw County Airport Commission.

6:1.2-4 Decisions of the Board of Zoning Appeals

In exercising the above powers, the concurring vote of two-thirds of the members present and voting shall be required to reverse or affirm, wholly or in part, or modify any order, requirement, decision, or determination of the Planning Official, or to decide in favor of the applicant on any matter upon which it is required to pass under this Ordinance, and to that end, shall have the powers of the officer from whom the appeal is taken and may direct the issuance of a permit. The Board, in the execution of the duties for which appointed, may subpoena witnesses and, in case of contempt, may certify such fact to the Circuit Court having jurisdiction.

All final decisions and orders of the Board must be in writing and be permanently filed in the Planning and Zoning Department as public record. All findings of fact and conclusions of law must be separately stated in final decisions or orders of the Board, which must be delivered to parties of interest by certified mail.

6:1.3 Right of Appeal

An appeal of a decision of a Planning Official who is not the Planning and Zoning Director shall be made to the Planning and Zoning Director.

6:1.3-1 Appeal to the Board of Zoning Appeals

An appeal of a decision of the Planning and Zoning Director made under a provision of Article 3, Zoning District Regulations, shall be made to the Board of Zoning Appeals as provided above.

6:1.3-2 Appeal to Circuit Court and Pre-Litigation Mediation

A person who may have a substantial interest in any decision of the Board of Zoning Appeals or an officer or agent of the County, as the case may be, may appeal from a decision of the Board of Zoning Appeals provided by SC Code of Laws §6-29-820 et sec. The appeal must be filed within 30 days after the decision of the Board is mailed (date of postmark).

6:1.3-3 Appeal to the Building Codes Board of Adjustments and Appeals

An appeal of a decision of the Building Official made under Article 4, Buildings and Building Regulations, shall be made to the Planning and Zoning Director. An appeal of a decision of the Planning and Zoning Director shall be made to the Building Codes Board of Adjustment and Appeals per Appendix A, Article VI of the Code of Ordinances of Kershaw County.

6:1.3-4 Appeal to the Planning and Zoning Commission

An appeal of a decision of the Planning and Zoning Director, County Engineer, or other County official made under a provision or regulation of Article 5, Land Development Regulations, shall be made to the Planning and Zoning Commission. The appeal must be filed within sixty (60) days after actual notice of the administrative decision, and shall be heard at the next regular Planning and Zoning Commission meeting scheduled at least thirty (30) days after the appeal is filed.

6:1.3-5 Appeal to County Council

An appeal of an action of the Planning and Zoning Commission shall be made to County Council per Chapter 4, Article VI of the Code of Ordinances of Kershaw County.

6:1.3-6 Exceptions Granted by the Planning and Zoning Commission

The Planning and Zoning Commission shall have the power to grant exceptions from the requirements for site plan or sketch plan approvals, and other projects under the review authority of the Planning and Zoning Commission as may be reasonable and within the general purpose and intent of the provisions of this Ordinance if the literal enforcement of one or more of the provisions of this Ordinance is not applicable to the specific project and/or is impractical or will exact undue hardship because of peculiar conditions pertaining to the site in question.

6:2 AMENDMENTS

From time to time the provisions of this Ordinance may be amended by the Kershaw County Council. The procedures for amending the various articles of this Ordinance shall be as proscribed by SC Code of Laws §6-29-760 and §6-29-1130.

6:2.1 Zoning Map Amendments

The following procedures apply to amending the Official Zoning Map through the process of re-zoning a parcel, a portion of a parcel, or multiple parcels from one zoning classification to another.

6:2.1-1 Initiation of Map Amendment

A zoning map amendment may be initiated by a property owner, the property owner's agent, the Planning and Zoning Commission, or the County Council. The Planning Official shall develop map amendment application forms and guidelines for petitions initiated by the property owner or his agent. If the petitioner is not the property owner or owners, the property owner or owners shall complete and have notarized a form designating the petitioner as his agent. Action shall not be initiated for an amendment to re-zone the same parcel or parcels of property or any part thereof to the same zoning classification by a property owner or owners or owner's agent more often than once every twelve (12) months. An application for a zoning map amendment withdrawn after the public notice has been published is subject to the twelve (12) month waiting period.

6:2.1-2 Application Procedure

Application forms for amendments shall be obtained from the Planning and Zoning Department. Completed forms, together with the required application fee to cover administrative costs, plus any additional information the applicant feels to be pertinent, shall be filed with the Planning Official.

Applications for zoning map amendments must be received in proper form, at least forty-five (45) days prior to the Planning and Zoning Commission meeting at which the amendment request will be heard, in order to schedule the public hearing.

6:2.1-3 Review by the Planning and Zoning Commission

A. All papers and other data submitted by the applicant on behalf of the map amendment request shall be transmitted by the Planning Official in a map amendment (re-zoning) staff report to the Planning and Zoning Commission.
B. The Planning and Zoning Commission shall conduct the public hearing. All meetings of the Planning and Zoning Commission shall be open to the public. At the public hearing and other meetings of the Planning and Zoning Commission, any party may appear in person, by agent, or by attorney.

6:2.1-4 Report of Planning and Zoning Commission

Following review of the proposed amendment and the advertised public hearing, the Planning and Zoning Commission shall reach a decision regarding said amendment and report its findings and recommendations to County Council for final action.

The Planning and Zoning Commission shall have thirty (30) days within which to submit its report. If the Planning and Zoning Commission fails to submit a report within the thirty (30) day period, it shall be deemed to have approved the proposed amendment. No change in or departure from the recommendations by the Planning and Zoning Commission made pursuant to the public hearing shall be transmitted to the County Council unless the change or departure is first submitted to the Planning and Zoning Commission for review and recommendation.

6:2.1-5 Notice of Public Hearing

A. In scheduling a public hearing for a proposed zoning map amendment, notice of the time and place shall be published in a newspaper of general circulation in the area at least fifteen (15) days in advance of the scheduled public hearing.
B. In cases involving re-zoning, conspicuous notice shall be posted on or adjacent to the property affected, with at least one such notice being visible from each public thoroughfare that abuts the property. Such notice shall be posted at least ten (10) days prior to the announced hearing, indicating the nature of the proposed change, identification of the affected property, and time, date, and place of the hearing.
C. The property owner and adjacent property owners shall be mailed a copy of the notice of public hearing at least ten (10) days prior to the public hearing.

6:2.1-6 Action by County Council

The County Council shall take action on the proposed amendment within sixty (60) days of receipt of the Planning and Zoning Commission's recommendation on an application. If no action is taken by the Council within such time, the proposed amendment shall be considered denied unless otherwise specified by Council. The County Council’s decision may reverse the Planning and Zoning Commission’s recommendations. All amendments to this Ordinance shall be made through the adoption of an ordinance.

Following final action by County Council, any necessary changes shall be made to the Official Zoning Map and/or text. A written record of the type and date of such change shall be maintained by the Planning Official.

6:2.2 Ordinance Text Amendments

This section shall apply to all text and other amendments to this Ordinance other than amendments to the zoning map.

6:2.2-1 Referral to Planning and Zoning Commission

Proposed text amendments to this Ordinance must be referred to the Planning and Zoning Commission for deliberation and recommendation. The Planning and Zoning Commission’s recommendations shall be received by the County Council prior to County Council action on the proposed text amendment.

6:2.2-2 Public Hearing

The County Council shall hold a public hearing on the proposed text amendment. The public hearing shall be held prior to the third reading of the amendment ordinance. In scheduling a public hearing for a proposed ordinance text amendment, notice of the time and place shall be

published in a newspaper of general circulation in the area at least thirty (30) days in advance of the scheduled public hearing.

6:2.2-3 Action by County Council

The County Council shall take action on the proposed amendment within sixty (60) days of receipt of the Planning and Zoning Commission's recommendation on an application. If no action is taken by the Council within such time, the proposed amendment shall be considered denied unless otherwise specified by the Council. County Council may approve of the Planning and Zoning Commission's recommendations on the proposed text amendment, amend the Planning and Zoning Commission's recommendations on the proposed text amendment, or deny the Planning and Zoning Commission's recommendations on the proposed text amendment. All amendments to this Ordinance shall be made through the adoption of an ordinance.

6:3 ADMINISTRATIVE FEES

The Kershaw County Council shall set fees for the processing and administration of the provisions of this Ordinance. Fees to be levied shall include, but are not limited to the following services:

A. Plans review fees for building (architectural) plans, engineering and construction plans, zoning and land development site plans, sketch plans, preliminary plans, planned development district (PDD) site plans, shared parking plans, phased clearing plans, buffer restoration plans, and other development plans as may by required to process a land development or building application.
B. Permit fees for building construction, moving and demolition permits; grading permits; sign permits and registrations; communications towers; electrical, gas, plumbing, and other specialty permits; manufactured housing and park model home moving and installation permits; use permits; and swimming pool permits.
C. Inspection fees.
D. Retirement of title processing fees for the conversion of manufactured housing to real property.
E. Development agreement fees for the drafting, processing, and administration of the agreements.
F. Written zoning verification and compliance determinations.
G. Plat approval fees for re-surveys, minor subdivisions, major subdivisions (final plats), lot reconfigurations, and other plats requiring Planning and Zoning Department approval prior to recording with the Register of Deeds.
H. Board of Zoning Appeals fees for petitions for appeal of administrative zoning decisions and variance requests.
I. Planning and Zoning Commission fees for petitions for appeals of administrative land development decisions and applications for exceptions to land development standards, required improvements, or submittal requirements.
J. Map amendment petitions for re-zoning.
K. Publications and duplication fees.

6:3.1 Continuance of Fees

All Fees that have been set by County Council in previous ordinances shall continue and remain in effect under this Ordinance.

6:4 VIOLATIONS AND PENALTIES

Any person, firm, or corporation in violation of any provision of this Ordinance shall, upon conviction, be guilty of a misdemeanor and fined per the provisions of this Article.

6:4.1 Processing of Violations

As of the effective date of this Ordinance, the following procedures shall be taken regarding violations and alleged violations of this Ordinance.

A. Actions Regarding Violations - Whenever a violation of this Ordinance occurs or a complaint is received that a violation is alleged to have occurred, the Code Enforcement Officer shall record and investigate such complaint, and take such action as provided by this Ordinance. Complaints may be filed in writing or verbally, stating fully the cause and basis thereof.

B. Ordinance Summons – Upon determination of the Code Enforcement officer that a violation of this ordinance has occurred, the Code Enforcement Officer may issue an ordinance summons to appear in Magistrate's Court. The ordinance summons shall state the penalty fine if convicted and the date and time of the court hearing.

C. Notice of Violation - Upon a determination of the Code Enforcement Officer that a violation has occurred, the Code Enforcement Officer may, in his or her discretion, issue a written notice of violation stating the nature of the violation; citing the section of the Ordinance being violated; and may give the violator up to thirty (30) days to remedy the violation. If the violation has not been corrected within the discretionary notice period, the Code Enforcement Officer may make a determination if any substantive remedial action towards correcting the violation has occurred. Upon the determination by the Code Enforcement Officer that no substantive remedial action towards correcting the violation has occurred during the discretionary notice period, the Code Enforcement Officer may issue an ordinance summons to appear in Magistrate's Court. The ordinance summons shall state the penalty fine if convicted and the date and time of the court hearing.

6:4.2 Penalties for Violations

A. **First Offense** - The penalty for a convicted first offense in Magistrate's Court shall be a fine not to exceed two hundred fifty dollars ($250) or thirty (30) days in jail as determined by the Magistrate plus court fees and assessments.

B. Continuing and Repeated Offenses - The penalty for a second and subsequent convictions for continuing or repeated offenses in Magistrate's Court shall be a fine not to exceed five hundred dollars ($500) or thirty (30) days in jail as determined by the Magistrate plus court fees and assessments.

C. Injunctive Relief - The County Attorney may seek injunctive relief with the Court of

Common Pleas for continued or repeated violations.

6:5 INTERPRETATION AND CONFLICT

The provisions of this Ordinance shall be held to be minimum requirements. Where the conditions imposed by any provision of this Ordinance are either more restrictive or less restrictive than any other applicable statute, the more restrictive statute, imposing higher standards or requirements shall govern.